ANALYSIS OF MAGNETIC COUPLING LINES WITH SHARED STRUCTURE USING TECHNIQUE OF FINITE ELEMENTS

Matheus LASMAR
Federal University of Itajubá – Brazil
mtlasmar@lat-efei.org.br

Guilherme FERRAZ
HVEX – Brazil
ferraz@hvex.com.br

Rogério SALUSTIANO
HVEX – Brazil
rogeriosalustiano@hvex.com.br

Luana BATISTA
Federal University of Itajubá – Brazil
luana@hvex.com.br

Renato CAPELINI
HVEX – Brazil
renato@hvex.com.br

Joana CAMPOS
Energisa – Brazil
joana.campos@energisa.com.br

Estácio TAVARES
Federal University of Itajubá – Brazil
estacio@lat-efei.org.br

ABSTRACT

The objective of this paper is to verify the effect of the electromagnetic coupling between lines that sharing the same structure in the performance of the dielectric compatibility stress. In a previous study of electromagnetic transients of the distribution line using the ATPDraw, high overvoltage was registered in occurrence of faults. In this paper, the finite element technique will be used to generate the voltage curves and voltage gradients, both corresponding to the recorded overvoltage. Some of the present data can be useful for new insulation projects applied to the equipment installed in this type of system.

INTRODUCTION

In urban areas, the definition of new exclusive transmission corridors for transmission and distribution lines is not always technically and economically viable. Directives that focus on visual comfort and sustainability are always present in modern projects. Unlike sharing between transmission lines with the same voltage level, when distribution lines and sub transmission lines are placed in the same structures, electrical disturbances in the subtransmission line can cause serious effects on the distribution network. These effects must be carefully evaluated.

The use of techniques based on finite element method allows a better understanding of the failure and the phenomenon involving the electric coupling of the lines. From the geometry of the structures it can be defined a network and then solve the Maxwell's equations for the entire study area. They are considered the properties of materials including nonlinearities and definition of boundary conditions that concern the different transient currents and system voltage level. Therefore, traditional networks building models can be evaluated obtaining performance levels higher than the current.

This paper assesses two lines that share subtransmission and distribution levels. In a previous study of electromagnetic transients of the distribution line using the ATPDraw, the current and voltage levels were calculated for normal operating conditions, in occurrence of faults and switching in subtransmission line. From these results, a finite elements simulation was performed in order to obtain the voltage gradient in the distribution line. Therefore, it was necessary to know the detailed parameters of the line components, information taken from the manufacturer's catalog and a series of electrical tests carried out by the technical team. Finally, also it was considered the data of permittivity and conductivity, looking for accuracy in the computer simulation results.

CASE STUDY – COMPONENTS END NETWORK DESCRIPITION

This study case refers to a 69 kV transmission line that connects the Julius Arp (JAP) and Conselheiro Paulino (CPA) substations, both owned by the Energisa Group and located in the city of Nova Friburgo – RJ, Brazil. This line shares its structures with both medium voltage (11.4 kV) and low voltage (220/127 V) networks, for approximately 3,8 km.

In order in make clear the technical features of the structures shared, Figure 1 shows a real case in study: Single circuit, at 69 kV sharing the tubular structure with distribution network, class 15 kV and low voltage network at 220 V.

Each component of the transmission and distribution systems it is presented in follows text.

High Voltage Phase Electric Cable - It was considered electrical cables type ACSR (Aluminum Steel Soul Cable), manufacturer Nexans. Cable's name of the Linnet. The presents the cable characteristics is type CAA, section 336,4 MCM, construction type 26/7, diameter 18,29 mm and linear weight 0,6883 kg/m.

Lightning Conductor Cable - It was considered electrical cables type OPGW (Optical Ground Wire), manufacturer Furukawa. Cable's name of the Centrum CM2.081.147.S24. The presents the Cable characteristics is type OPGW, construction type 12 FO, diameter 14,4 mm, resistance DC of the 20 °C 0,491 Ohm/km and linear weight 0,700 kg/m.

Figure 1. Shared structure, study case.

High Voltage Insulators – Currently, it has been used insulators provided by different manufacturers, such as Isoelectric e Balestro. The Figure 2 e 3 presents these components:

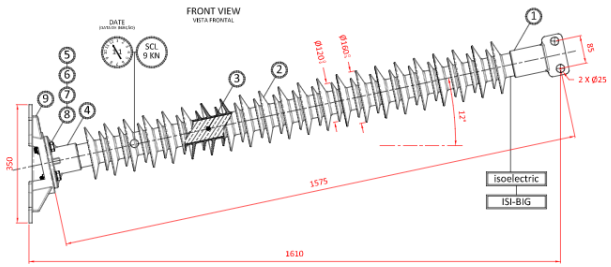

Figure 2. Electric insulation – Manufacturer Isoelectric.

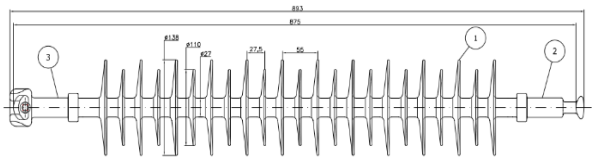

Figure 3. Electric insulation – Manufacturer Balestro.

The Tables 1 e 2 presents the technical features of these electrical components respectively:

Table 1. High Voltage Insulators Characteristics - Isoelectric.

Withstand voltage under industrial frequency	Dry	kV	485
	Under rain	kV	405
Withstand voltage	Positive	kV	740
	Negative	kV	815
Leakage length		mm	4200
Arch length to dry		mm	1380

Table 2. High Voltage Insulators Characteristics - Balestro.

Withstand voltage under industrial frequency	Dry	kV	240
	Under rain	kV	205
Withstand voltage under atmospheric impulse, both polarity			445
Arch length to dry		mm	757

Medium Voltage Phase Electric Cable - It was considered electrical shielded cables, that present nominal voltage class 15 KV, section of 50 mm², with 7 wires, nominal insulation thickness is 3 mm and current conductivity of 181 A at 70 ° C and 225 A at 90 ° C [1].

Medium Voltage Messenger Cable - It was considered cable that present nominal diameter 0,95 mm, resistance DC 3,73 ohms/km at 20ºC.

Low Voltage Cables – It was considered multiplexed cable (Quadruplex), with phase conductors in cooper insulated in polyethylene (XLPE- 90 ° C) to 0.6 / 1 kV and neutral courier conductor in aluminum alloy [1]. For phase conductors, the minimum cross-section is 120 mm², the diameter of the conductive part is 12.8 mm, the insulation thickness is 2 mm, the total diameter is 16.9 mm with an inductive reactance of 0.07185 Ohm / km, current conductivity of 224 A at 90 ° C and electrical resistance of 0.3414 Ohm / km. The messenger cable has a section of 70 mm², a diameter of 13.5 mm, current conductivity of 140 A at 90 ° C and resistance 0.6320 Ohm / km at 90 ° C.

Medium Voltage Support Structure – The type of structure used in the medium voltage follows the Energisa Unified Distribution Standard, given that is found in ndu004 page 106 [2]. Figure 4 shows the top part of structure in medium voltage:

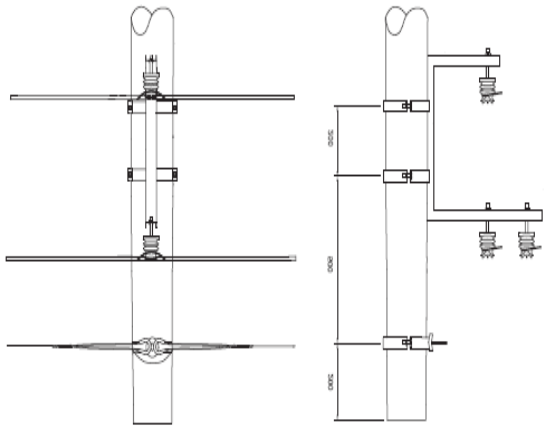

Figure 4. Medium Voltage Support Structure.

Medium Voltage Spacer - It was considered the angled with claws spacer that present nominal voltage class 15kV, according Figure 5.

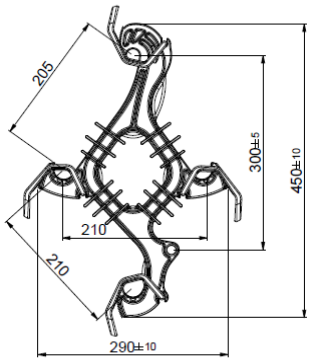

Figure 5. Typical spacer.

The minimum distances and positions of the conductors in relation to the ground follow the Unified Distribution Standard of Energisa [3]. The data can be found in ndu004 page 19. The complete layout of the structure can be seen in the Figure 6. It shows that the structure is approximately 24 m, tubular in concrete, the distance between the arrester cable and the first phase cable of the high voltage is 1.8 m. The distance between phase cables is 2 m. The medium voltage support structure is at a height of 7 meters from the ground, with spacing in order of 20 cm between phases. The low voltage support structure presents almost 5 meters from the ground with a maximum spacing of 4 cm between phases.

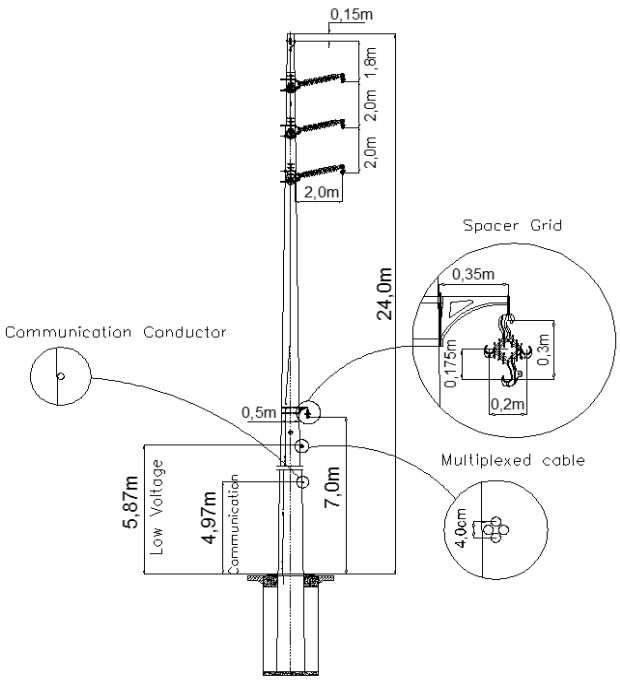

Figure 6. Conductors positioning in structure shared.

The electrical resistance at the base of the tower varies between the values 12 and 53 Ohms, adopting the average value of 25 Ohm for simulation effect.

SIMULATION METHODOLOGY

In a previous study of electromagnetic transients of the distribution line using the ATPDraw, voltage levels were calculated for operating conditions, in occurrence of faults. The highest level of overvoltage occurred in the case: Single-phase-to-ground fault applied at 69 KV bus on the Conselheiro Paulino substation. The Figure 7 shows the induced voltage measured at the medium voltage line [4].

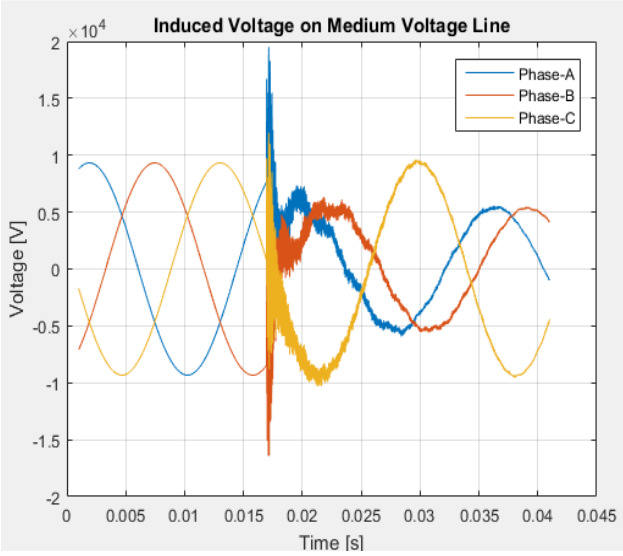

Figure 7. Same potential line in 69 kV.

The Figure 8 shows the induced voltage measured at the low voltage line.

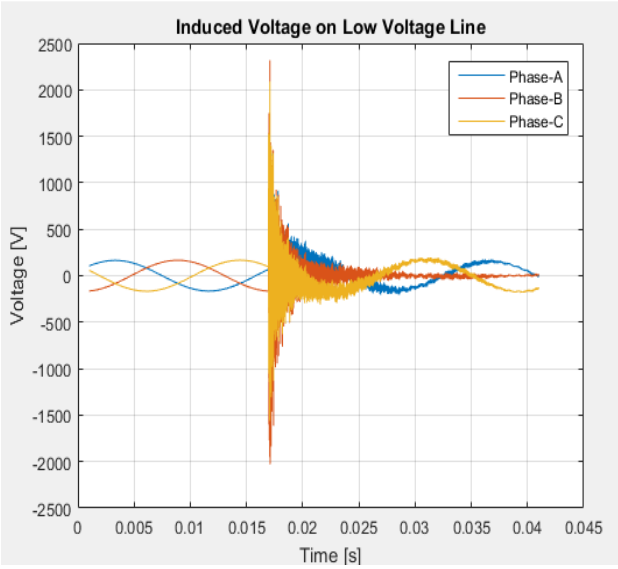

Figure 8. Induced voltage on low voltage line.

The Table 3 summarizes the largest peak of overvoltage found. These values were obtained considering distinct instants of time for each level of voltage.

Table 3 – Maximum overvoltage of each phase.

High Voltage peak [KV]	VA	2.3
	VB	6.23
	VC	-71.2
Media Voltage peak [KV]	VA	19.3
	VB	4.83
	VC	11.8
Low Voltage peak [KV]	VA	2.07
	VB	2.32
	VC	2.09

For the finite element simulation, the voltage vectors of the worst case were imported. From these, a case study can be made in the time domain, pointing out all the voltage gradients. With this information, the worst results were obtained for electrical stresses, thus isolating these instants of time for analysis.

The basic materials used in the simulation were: Air, aluminum, structural steel, concrete, silicon and copper. Fine integration grid, total simulation time 50 us, with step of 0.1 us, geometry resolution given in mm, with maximum tolerance of 1x10-6. The computer used has 4 i7 processors of 4.0 GHz each, with seven cores each, 64 Gb RAM, 1600 MHz, NVIDIA GeForce GTX 770 video card.

THE ELECTRICAL EFFORTS

The figure 9 a) below shows the voltages that arise in the phases and their same potential line. In this case, it is not exceeded or operational limit of the line when the phase A was a short circuit. However, a figure 9 b) shows the main electric gradients and it is possible to observe that an interface with a chain of insulators is more critical, notoriously this locality is the process of formation of the corona effect.

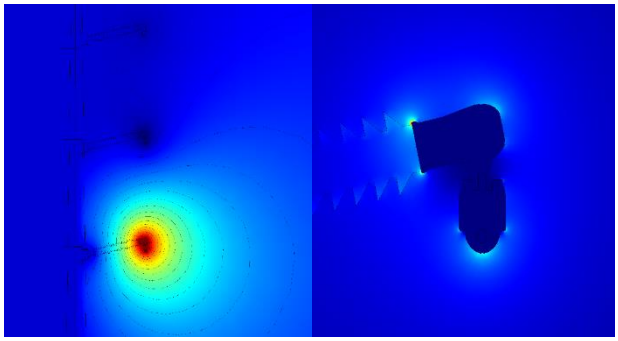

Figure 9. a) same potential line in 69 kV; b) electrical Gradient in 69 kV, the phase with major gradient.

The following figure 10 a) and 10 b) represents, during the same event, a short circuit in phase A of the high voltage, voltage gradients in the distribution network, class 11.4 kV. In the image, we can extract that the lateral phase presents a greater gradient, however it is not enough to damage the equipment installed in the network, both transformers and cables and spacers. The overvoltage is not sufficient to sensitize the arrester. However, in more critical cases, than those studied, failures would begin in the degradation of medium voltage cables near the spacers. [5-7].

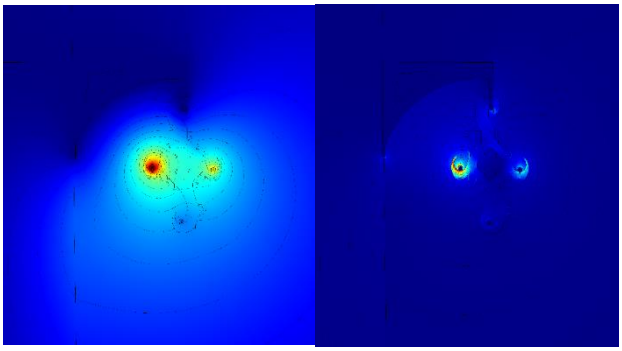

Figure 10. a) same potential line in 11.4 kV; b) electrical Gradient in 11.4 kV.

Finally, the following figure 14 details the gradients formed from the fault condition in the low voltage distribution networks, class 220 V. It was considered during the simulation that the phase cables were very close to the (neutral) messenger cable, but it wasn´t in touch.

However, in many cases, they touch each other along the path and the electrical effort is totally concentrated in the insulation (2 mm of high density polyethylene in this type of cable). This effort, when concentrated in the insulation of the cable can lead to rupture of the dielectric, however as the overvoltage is temporary, probably the electric arc will be extinct and this space will be filled by air.

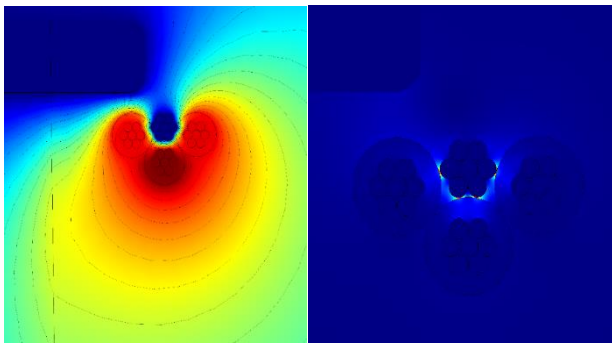

Figure 11 a) same potential line in 220 V; b) electrical Gradient in 220 V.

CONCLUSION

Partial results of the simulations show high levels of voltages induced in the distribution lines, affecting the integrity of the components installed at the 13.8 [KV] level. Moreover, it can risk the integrity of the connected loads at the 220 [V] level.

The simulations showed that electrical gradient stresses occur on covered cables in the distribution lines, at the interface with the spacer and along all low voltage cables. In this second case, there is the great possibility of the cable collapsing and drilling.

ACKNOWLEDGEMENTS

The authors thank ENERGISA for the financial and technical support and the High Voltage Laboratory (LAT-EFEI) of the Federal University of Itajubá for the structure and technical consulting.

REFERENCES

[1] ENERGISA - Standards and material specifications of distribution – NDU-010 – In Portuguese.

[2] ENERGISA - Standards and material specifications of distribution – NDU-006 – In Portuguese.

[3] ENERGISA - Standards and material specifications of distribution – NDU-004 – In Portuguese.

[4] L. Prikler, H. K. Hoidalen, 2009, *ATPDraw Users' Manual*, version 5.6. Norway.

[5] MALIK, N. H.; AL-ARAINY, A. A.; QURESHI, M. I. "Electrical in Power Systems". New York: Marcel Dekker, 1998.

[6] NÓBREGA, A. M.; MARTINEZ, M. L. B.; QUEIROZ, A. A. A.; *Testing and Analysis on XLPE Brazilian Covered–TDEI*, Vol. 20, No. 2, pp. 628-643, 2013.

[7] E. R. Hilsdorf, M. L. B. Martinez; *"Porcelain Insulators and Covered Conductors – A Problem of Dielectric Compatibility Porcelain Insulators and Covered Conductors A Problem of Dielectric Compatibility"*, October 2015, INMR.