SUPPORTING DER CUSTOMER PARTICIPATION IN ACTIVE DISTRIBUTION NETWORKS AND LOCAL MARKETS

Laura KANE
Smarter Grid Solutions – UK
lkane@smartergridsolutions.com

Richard WEST
Smarter Grid Solutions – UK
rwest@smartergridsolutions.com

Rachael TALJAARD
Smarter Grid Solutions – UK
rtaljaard@smartergridsolutions.com

Robert MACDONALD
Smarter Grid Solutions – UK
rmacdonald@smartergridsolutions.com

Graham AULT
Smarter Grid Solutions – UK
gault@smartergridsolutions.com

Euan DAVIDSON
Smarter Grid Solutions – UK
edavidson@smartergridsolutions.com

Alan GOODING
Smarter Grid Solutions – UK
agooding@smartergridsolutions.com

ABSTRACT

The growth of distributed generation in the UK has led to the increase in the number of flexible Distributed Energy Resource (DER) connections and services required at distribution level. In some parts of the UK, flexible connections are offered to Distributed Generators (DG) via the use of Active Network Management (ANM) systems. In exchange for a cheaper, quicker connection to the network, DG may be subject to curtailment when the network is constrained.

This paper presents a Virtual Private Wire (VPW) solution that can allow generation and demand within the same ANM system to be linked in association with specific network constraints. Smarter Grid Solutions developed a demonstration system in order to show the effect of a VPW arrangement in the SP Energy Networks Accelerating Renewable Connections (ARC) trial area.

This paper draws conclusions on both commercial and technical issues as well as solutions for local network balancing introduced by the VPW concept. The future direction for control architectures required to support VPW and multiple other new DER management applications is also set out, along with the wider market and system implications of coordinated DER control and local system balancing.

INTRODUCTION

Customer participation in electricity systems is advancing in many ways, including incentive based small-scale renewables development, behind-the-meter self-provision, and demand response participation. More is expected in the future as electric vehicles, grid parity of solar power, electric heating, internet connected devices, and the full implications of smart meter roll-outs are exploited. As these developments increasingly impact on network and system operation, the solutions to manage and harness the value from Distributed Energy Resources (DER) across stakeholders becomes a more urgent problem. Visibility of DER value at different locations and times is an enabler for enhanced DER participation in distribution networks [1] and the full development of the system flexibility market for DER.

From a DER coordination perspective, the monitoring and control arrangements, and business models required to align with customer and DER device characteristics are central to effective DER integration. Different possible mechanisms to deliver DER flexibility for the system (e.g. business models, technical solutions) are reviewed briefly in this paper with emphasis on the commercial arrangements supporting specific DER operators and local/community energy management. This provides important context for the proposed Virtual Private Wire (VPW) solution.

The VPW concept addresses the opportunity for local coordination of DER to maximise the use of existing network assets. Enhanced levels of Distributed Generation (DG) connection and operation are enabled by virtual coordination of DG operation with responsive demand and energy storage. The SP Energy Networks 'Accelerating Renewable Connections' (ARC) project has trialled VPW functionality with the participation of connected network customers and Community

Energy Scotland (CES) who developed the business models for the customers participating in the trial.

COMMERCIAL MECHANISMS FOR DER FLEXIBILITY

There are a number of approaches than can be used to facilitate the sharing of capacity between consumers in a constrained part of the network.

Bilateral Contract

The bilateral agreement can take place between a load on the network, and a generator subject to a constraint. During a curtailment event, the generator export is protected to the value of the associated load capacity. In a demand side response scenario the load would receive a signal to increase demand in order to create headroom for the generator to continue exporting. There would likely be remuneration for this service, the details of which would be decided by the participating parties.

Aggregation

Aggregation would allow multiple parties to create a commercial agreement for constraint management. Multiple loads could be assigned to a single generator. In this case, when a curtailment instruction is received, the increase in load to offset DG curtailment could be shared across multiple parties, and each party remunerated depending on their contribution.

Local Energy Supply Company

The VPW technology could facilitate the creation of a local Energy Supply Company. Generation could be assigned to supply particular loads such as community buildings, shops or factories when renewable resources were available, and only use grid import when renewable imports were not sufficient to meet demand.

Participating in a Market (DSO)

With the VPW platform in place, the development of a DSO market in the network area for trading and provision of network services is enabled. With the technical elements already in place, all that is required is for the development of a suitable market and regulatory structure that would enable democratisation of energy services to smaller consumers connected at distribution level. This is discussed in more detail in a later section.

THE VIRTUAL PRIVATE WIRE SYSTEM

In the SP Energy Networks ARC project, generators have been offered non-firm connections, facilitated by Active Network Management (ANM). Due to the costly and time-consuming nature of the network upgrades required to provide firm connections for the connecting generators, generators are connected via ANM, which monitors their export in real-time against specific network constraint locations. If the power flow through the network constraints reaches a certain threshold, the generators are curtailed in accordance with a Last-In First-Off (LIFO) principle of access until the constraint is cleared.

It is possible to reduce network flows and avoid the curtailment experienced by a generator by offsetting with load import during constraint breaches. If new network load demand is located at a site remote from the generation and a commercial arrangement is created between generation and load then the requirement for VPW is formed. A private physical wire between the two sites will be costly or in some cases impractical due to wayleave issues.

It is necessary to facilitate the sharing of information between the new load demand and the generator supporting it, and the ANM platform supporting the VPW arrangement. This ensures that the correct capacity can be allocated to the generator when the need arises.

The Virtual Private Wire Demonstration

Smarter Grid Solutions developed a demonstration system in order to create learning around VPW arrangements. The demonstration system was focused on a dynamic network model, built in the DIgSILENT PowerFactory power systems analysis software. Each generator in the network model was configured with a dynamic controller, capable of receiving set-points from an ANM system, and issuing generator export information. The diagram in Figure 1 illustrates the system set up.

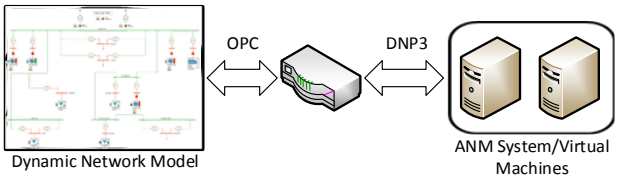

Figure 1: Diagram of VPW Arrangement

The dynamic model is interfaced with a Remote Terminal Unit (RTU) via an Open Platform Communications (OPC) interface. The RTU represents the local controller, which is one element of the ANM system, and enforces the generator set-points issued from the central ANM system. The RTU interfaced with virtual servers, hosting the ANM system and control algorithms, via DNP3.

Virtual Private Wire Components

It is possible for a VPW arrangement to be installed as a stand-alone solution, or as part of a wider ANM solution. As a result, it uses the same components as set out in the UK ANM Good Practice Guide [2]:

- Central ANM controller and algorithm;
- Interface to SCADA/Network Management System;
- Measurement Points deployed at constraint locations;
- Local controller deployed at controlled device.

As a specific generator and load are associated through a VPW system, additional infrastructure is required to monitor the load so that the ANM system is able to determine the dynamic export capacity available to the generator. Monitoring and metering is required to ensure that the network remains operating within limits, and any settlement can be calculated between the parties participating in the VPW arrangement.

ANM Operation with Virtual Private Wire

A VPW system can provide a solution for different operational variants. These are outlined below, and can be configured using existing ANM infrastructure:

- Simple VPW – new load associated with a generator not at the top of the LIFO priority stack. The generator benefits from the new load before the generators ahead of it in the stack;
- Demand Side Response – demand responding without an arrangement with a specific generator to reduce curtailment to generators;
- Load Sharing – an extension of the simple VPW principle to associate more than one generator to a new demand.

The demonstration network is shown in Figure 2.

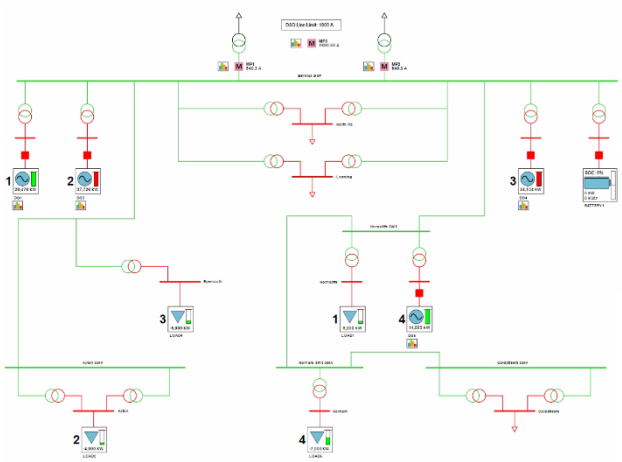

Figure 2: Overview of VPW Demonstration Network

The implementation of a simple VPW arrangement is shown in Figure 3. Generator 4 and Load 4 are paired via a VPW agreement. When a constraint is breached at the measurement point, the ANM system will curtail generation as normal, but will limit the curtailment issued to Generator 4. Generator 4 export capacity will be protected to the value of Load 4 import.

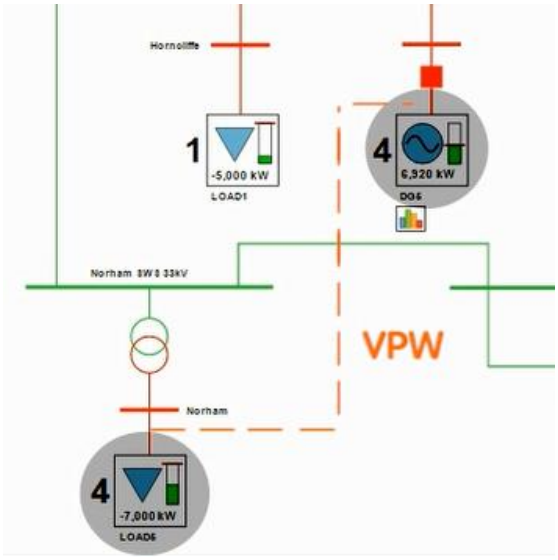

Figure 3: Simple Virtual Private Wire

A Demand Side Response scenario is illustrated in Figure 4. In this scenario there is no agreement with a specific generator. When a constraint is breached at the measurement point, the ANM system will instruct Load 5 to increase its import in order to reduce the curtailment issued to generators, specifically Generator 4 in this example.

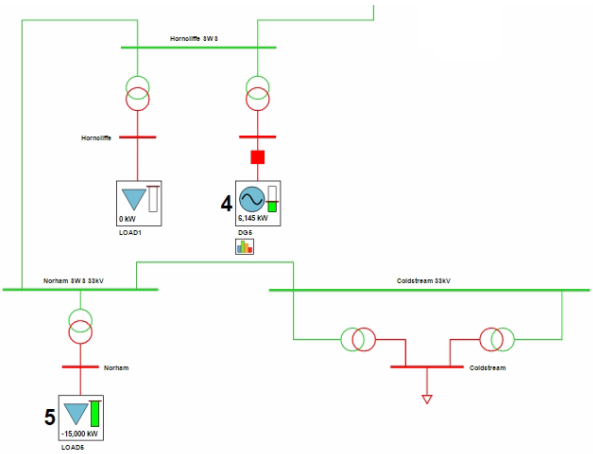

Figure 4: Demand Side Response

A load sharing scenario is illustrated in Figure 5. In this case a single new demand, Load 4, is paired with multiple generators (in this example two generators are labelled as No. 4 to identify with Load 4). When a constraint is breached, the ANM system will curtail generation as normal, but will limit the curtailment issued to the generators. The generation export capacity will be protected to the value of Load 4 import. In this example the export capacity sharing is 50:50. If the VPW arrangement is part of a wider ANM system, and if the net export from Generators 4 after load sharing is 0 MW, then additional generators will be curtailed beyond the VPW arrangement, in accordance with the ANM principles of access [3], if the constraint still remains on the network.

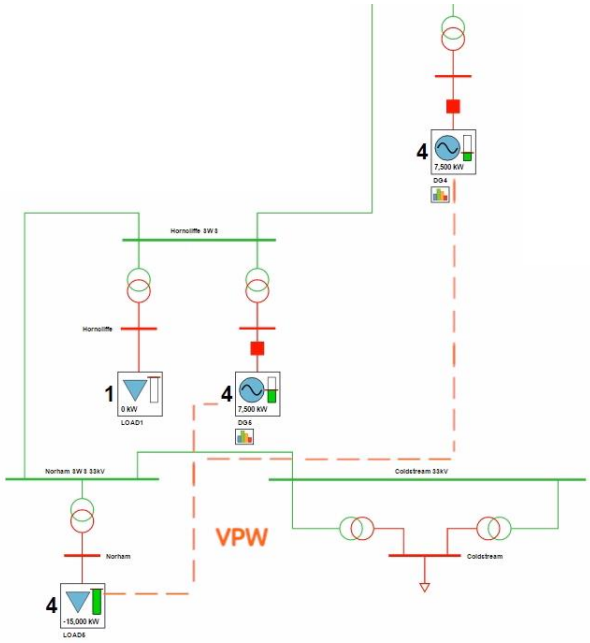

Figure 5: Load Sharing Example

In Figure 6, a trace of the current at Measurement Point (MP) 3 is shown. When the MP threshold is breached, the generators are curtailed until the current reaches the reset level and are released after a configured time period, in 500 kW blocks of capacity.

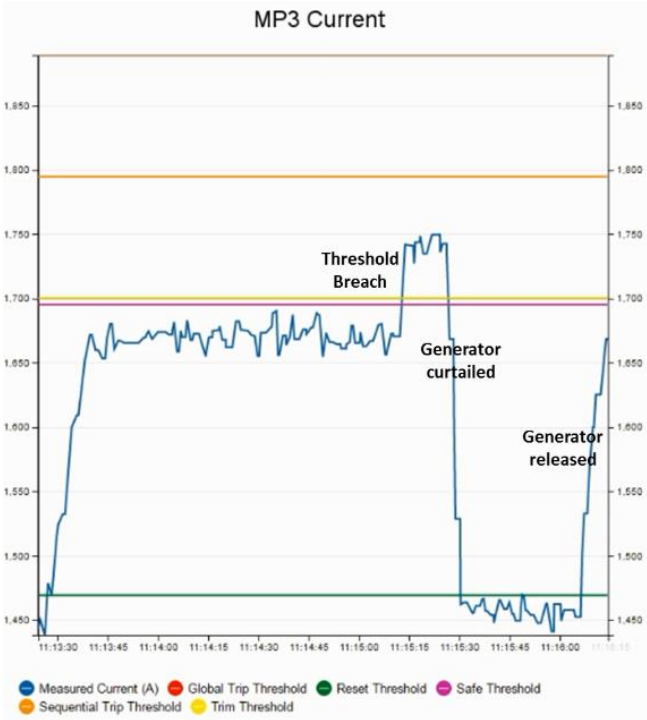

Figure 6: Current trace at MP3

SCALABILITY OF THE VIRTUAL PRIVATE WIRE SOLUTION

The demonstration of VPW has proved that it can be technically implemented on ANM infrastructure that is readily available today, and available to Distribution Network Operators (DNOs). It is anticipated that ANM will expand in the future, with the potential for the monitoring and control of hundreds/thousands of DER devices. Incorporating VPW functionality into an already live ANM system can be achieved without detrimental effect on the key functionality and objectives of the ANM system.

Emerging, new Distribution System Operator (DSO) concepts and business models have been gaining prominence, and ANM technology has been identified as a key enabler for the transition from DNO to DSO [5].

For a network area with an ANM platform, and

VPW capability, the technical platform for a DSO style market is already in place. As the DNO develops the market, and identifies the roles and responsibilities within the DSO, the ANM platform can operate at the basic level with a VPW agreement in place, and then accommodate a more complex market arrangement once the DSO is fully established as a market operator.

As DER customers participate in VPW (and future DSO) commercial and market arrangements, then supporting connection and operational processes and tools will be required. For example, the impact of VPW compared to business-as-usual flexible DG connections and the value case of that will need further attention.

CONCLUSIONS

This paper has presented different possible mechanisms to deliver DER flexibility for the distribution network though the use of VPW and ANM platform technology.

Currently in the UK there is a lack of matured commercial mechanisms for flexible demand at distribution level to participate in any form of ancillary services on the network. Through the roll-out of ANM platforms, and by implementing VPW solutions, a market for DER flexibility can be created. At the basic level, this would be an agreement between generation and demand parties, extending to aggregators controlling groups of demand and generation behind a single constraint. Once more work on market mechanisms has taken place, this can easily be expanded upon to include Local Energy Supply Companies, or the development of the DNO into a DSO.

The technical platform already exists to implement a VPW solution today. This solution could be established in an existing ANM system or as part of a new scheme where the ANM technology supports this. There are a number of approaches which can be taken, including a simple VPW arrangement between two parties, demand responding without an arrangement with a specific generator to reduce curtailment to generators, and an extension of the simple VPW principle to associate more than one generator to a new demand.

VPW is a scalable solution, and as DNOs move towards a DSO type role, the system can be built upon to offer more complex market arrangements, perform balancing actions, and provide the DSO with the necessary information to perform settlement actions.

The next stage in this work will be to demonstrate this solution in a real network operating environment, with flexible DER customers, and to further develop market mechanisms for both VPW and DSO solutions in the future.

REFERENCES

[1] R. Li et al, 'Distribution Locational Marginal Pricing for Optimal Electric Vehicle Charging Management', IEEE TPWRS, 2016.

[2] Energy Networks Association (UK), 'Active Network Management – Good Practice Guide', July 2015. http://www.energynetworks.org/assets/files/news/publications/1500205_ENA_ANM_report_AW_online.pdf

[3] L. Kane and G. Ault, "A review and analysis of renewable energy curtailment schemes and Principles of Access: Transitioning towards business as usual," Energy Policy, vol. 72, pp. 67–77, May 2014.

[4] SPEN ARC LCNF submission (project pages at: http://www.spenergynetworks.co.uk/pages/arc_accelerating_renewable_connections.asp)

[5] SP Energy Networks DSO Vision, October 2015: http://www.spenergynetworks.co.uk/userfiles/file/SPEN%20DSO%20Vision%20210116.pdf