COST-BENEFIT ANALYSIS FOR USING THE LI-ION BATTERIES IN LOW-VOLTAGE NETWORK FOR DECREASING THE OUTAGE TIME EXPERIENCED BY CUSTOMERS

Olli VILPPO, Joni MARKKULA, Pertti JÄRVENTAUSTA
Tampere University of Technology – Finland
olli.vilppo@tut.fi
joni.markkula@tut.fi
pertti.jarventausta@tut.fi

Sirpa REPO, Tomi HAKALA
Elenia Oy – Finland
sirpa.repo@elenia.fi
tomi.hakala@elenia.fi

ABSTRACT

Battery energy storage (BES) installed in the low-voltage busbar of a secondary substation can prevent part of the customers' interruptions in a low voltage (LV) network that would happen due to failures in the supplying medium voltage (MV) network or rarely in the high voltage network (HV). In fact, over 80% of average customer outage time comes from the interruptions in the MV network [1]. One way to improve the network reliability for decreasing the interruption time of customers is to focus the investments on the MV network (e.g. network automation or cabling). The other option is to develop local solutions at LV network level by energy storages.

This study compares the life-time costs of Li-ion batteries against the benefits achieved by decreasing the customer interruption costs (CIC) defined by the Finnish network business regulation model. The analysis is done by using the interruption and network data of Elenia Oy consisting of 13,867 LV networks in rural areas. The results indicate profitability in the interruption prone LV networks.

INTRODUCTION

Today's society is increasingly dependent on the continuous availability of electrical energy and the power grid is one of the largest national assets. During 2010-2011, the Finnish power distribution system was struck by two large storms. As a result, the Finnish Electricity Market ACT (EMA) [2] was revised and the requirements for uninterrupted supply of electrical power were described. Distribution System Operators (DSO) were given strict requirements: urban areas are not allowed to face interruptions of over 6 hours, and outside urban areas the maximum interruption time is 36 hours. To achieve the reliability limits, the DSO's in Finland have commenced vast ground cabling projects [1] which increase the cost of network infrastructure and the grid fee for customers.

In rural area network, the end of the feeder doesn't always have back-up supply connection from the other feeder. This increases the length of interruption time and reliability limits can be hard to achieve. Especially in such locations BES offers one possibility to decrease the outage times experienced by customers without costly reinvestments to the grid.

In recent years Li-ion battery prices and cost of power electronics have decreased substantially and are estimated to lower further, which has made the BES a more economically interesting option.

In the existing work the BES profitability in outage mitigation has been suggested mainly in case studies such as [3] and [4]. In paper [3] BES was utilized proactively to prevent the outage conditions caused by the excessive peak feeder loads. In paper [4] BES outage mitigation was performed side by side with other grid applications.

In this paper the whole rural network data is analyzed to present a more comprehensive view on the BES costs and benefits when utilized solely in outage mitigation.

Finnish regulation model

The Finnish Energy Authority (EA) is the authoring body that monitors and regulates the energy market participants in Finland. EA regulation model [5] controls the maximum allowed profit DSO can charge from its customers through grid tariffs.

The regulation defines the harm that is caused for the customers by the interruption. These values are presented in Table 1 for the outages that happen in DSO's MV network. Starting from 2020, the same parameters are also applied for the DSO's HV networks (currently only longer interruptions are considered). [5]

Table 1. Customer Interruption Cost parameters (i.e. unit prices) in Finland (2015) [5].

Unexpected interruption		Planned interruption		Delayed automatic reclosing	High-speed automatic reclosing
€/kWh	€/kW	€/kWh	€/kW	€/kW	€/kW
13.13	1.31	8.12	0.60	1.31	0.66

In case that the BES benefits for the customers are greater than its costs for DSO, it provides value from the national economy point of view. From the DSO's perspective the economies are not that straightforward because of the complicated regulation model.

The DSO's reasonable return is determined by the present value of the distribution network assets. The different incentives in the model are designed for the DSO to improve in its operations. DSO cannot own BES and include it in the network assets. However, DSO can buy BES functionalities as an ancillary service from a third party provider. This service decreases the expected CIC but increases the controlled operational expenditure (COPEX).

The reduced CIC value affects the DSO's allowed profits positively through the quality incentive but the effect is temporary. In the quality incentive the total CIC is

compared yearly to the average level of the previous two regulation periods (i.e. 8 years), which means that the new comparison level will be affected by the benefits achieved with the BES in the previous periods.
The increase in COPEX can reduce DSO profits through the efficiency incentive. The operations of the DSO are cost-effective when the input, or costs, used in its operations are as small as possible in relation to the output of operations. Company specific efficiency calculations are performed with the Stochastic Non-smooth Envelopment of Data (StoNED) method. COPEX is used as the variable input, which the efficiency target is aimed at, and CIC is used as one of the output variables. The decrease of CIC might negate part of the effect of the increased COPEX, but simulating this would require the StoNED tool and other DSO specific parameters. [5]
DSO is also liable for fixed payments for the customers affected by the long interruptions. The payments are required if the outages last more than 12 h and they increase in steps with longer interruption durations. [2]
In this paper the BES benefits are regarded as saved CIC and the analysis does not consider the complicated regulation model in detail. After the following regulation periods until 2023, regulation may be modified to include incentives for using BES also for DSO purposes.

Battery properties

Lithium-ion battery chemistries differ from each other substantially - one chemistry has higher energy density, and the other one may last longer in use. This is why choosing the correct battery with correct characteristics for the application is important. The key characteristics when analyzing battery energy storages for interruption avoidance are:

1. Price (€/kWh)
2. Output power rating (C-rate = A / Ah ≈ W/Wh)
3. Expected lifetime

Power rating: C-rate is the value describing how quickly a battery can be discharged. 1 A output power from 1 Ah battery cell equals 1 C (i.e. battery empty in 1 hour). Doubling the discharge current to 2 A equals 2 C-rate (i.e. battery empty in 0.5 hours). In this study kW/kWh was used for C-rate value.
Cycle life: amount of full charge-discharge cycles a battery can provide before reaching end-of-life *(EOL)*
Calendar life: time before battery reaches end-of-life
Expected lifetime: Lithium-ion battery is considered to reach its end of life when 20% of the original capacity has been permanently lost. Battery "end-of-life" is loosely defined but the capacity loss indicator needs to be taken seriously as lithium-ion batteries may expose a safety risk if mishandled or used after significant capacity loss [6].
Battery cell has minimum and maximum voltage, maximum charge and discharge current and operating temperature requirements. It is important to understand that Li-ion batteries should never be operated outside given limits (i.e. safe operating area).

In this application battery calendar life limits the BES usage, not cycle life, because of the low number of cycles from the interruptions. The biggest factor affecting the calendar life is the storage temperature [7]. Storing the battery in a cool location (5-10 °C) all year round is important for the lifetime maximization.

Grid connection

Connecting the battery to low voltage AC grid (3-phase 400 V) needs to be done through DC to AC inverters. Basic topology is presented in Figure 1. Fault ride through principle would mean that a parallel-connected BES would operate on such a quick speed that the customer wouldn't experience the interruption. In practice there are some difficulties in the implementation such as the switch delays and power electronics reaction time.

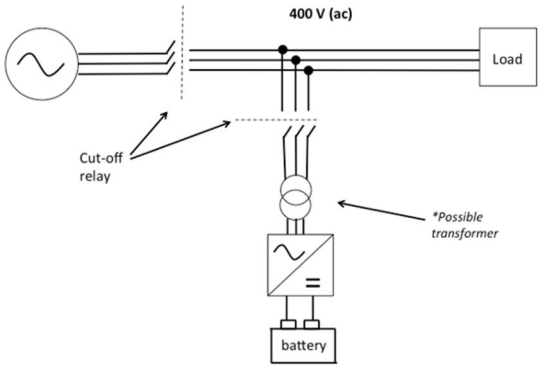

Figure 1. Basic topology for connecting the BES to the grid

One of the possible solutions would be using a series connected BES (Figure 2). The downside to this topology is the constant losses in AC-DC-AC conversion.

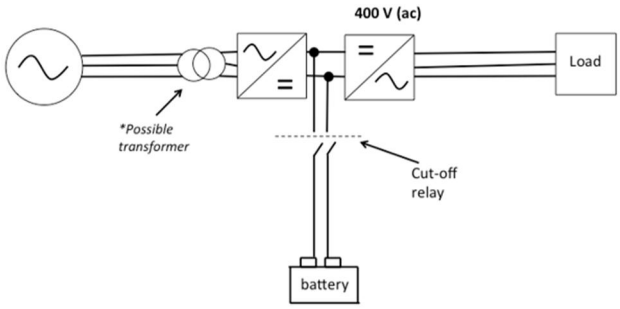

Figure 2. Series connection with fault ride through principle

ANALYSIS METHOD

Data set

The analysis is done by using the interruption data and network information of Elenia Oy, which is the second largest DSO in Finland with some 418,000 customers and over 65,000 km distribution network in a 50 000 km2 geographical area [1]. In total 13,867 LV networks in rural areas were included in the analysis. The dataset included interruption types and durations of all the secondary

substations that had been connected to the grid during the whole data period (1st Jan 2011-23rd Jun 2016) and had the maximum load between 5-400 kW. The interruptions considered included DSO's own MV network and own HV network faults.

The dataset's CIC accumulation per different outages times is presented in Figure 3. High-speed automatic reclosing (HSAR) lasts only 300 ms and the maximum duration of the delayed automatic reclosing (DAR) is defined to be 180s. The distribution of the outage durations reflects the underlying DSO activities. It takes on average about 10 minutes for the automatic or remote controllable switches along the network to resolve part of the outages. The manually operated disconnectors resolve part of the faults after 100 minutes on average.

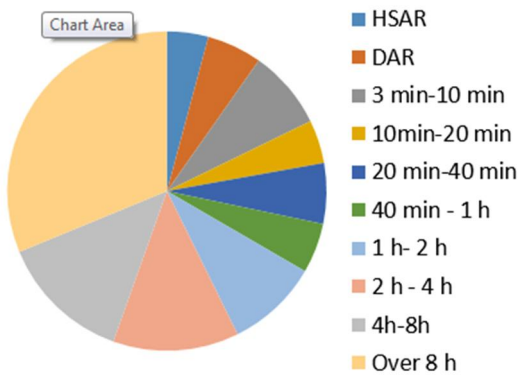

Figure 3. Total CIC accumulation in dataset per different outages times

Calculation Parameters

Three different lithium-ion battery types were chosen for the comparison in this study.

- LFP: Lithium Iron Phosphate [Sinopoli]
- LTO: Lithium Titanate [Altairnano]
- NCA: Lithium Nickel Cobalt Aluminum Oxide [Tesla]

Table 2 shows the used calculation parameters for the examined BES. The same parameters were applied also in [8].

Table 2. Assessed battery chemistries [9], [10], [11], [12]

Li-ion battery type	**LFP**	**NCA**	**LTO**
Estimated life time (yrs.)	15	15	25
Price (€/kWh)	500	250	1300
Discharge max.	1 C	C/3	6 C

For the cost of DC/AC inverter, a 200 €/kW price was used. Inverter price is an estimation based on the current solar inverter pricing that is publicly available (e.g. SMA inverters). For the bi-directional grid-tie inverter, an interview with a Parker representative was the basis for the price estimation. A cost of 1500 € was used for the installation of the BES. The BES and inverter were assumed to be maintenance free in the calculations.

The BES kWh-size selection directly affects how long an interruption duration is avoided and how much is invested in the battery. Minimizing the BES size means that the energy stored in the battery is utilized most in various interruption times i.e. the ratio of avoided CIC per BES cost is highest as indicated in Figure 3. At the same time the ratio of the avoided CIC per inverter cost and installation cost is the lowest. According to the first round of calculations with different BES sizes, the minimum battery size gave the highest return on investment (ROI%) with the selected cost parameters and it was selected as the basis for the final calculation method.

Calculations

The profitability of equipping the secondary substation with the BES was calculated in Matlab. The calculations were made for every secondary substation individually.

The maximum load of every secondary substation was retrieved from Elenia's data which determined the power requirement for BES. Battery maximum discharge C-rate was used to derive the minimum battery size. This was further divided by 80% to ensure sufficient power capability in EOL. Equation (1)

$$Battery\ size = \frac{Secondary\ substation\ max.load}{\text{Max.}\ discharge\ \text{C} \times 80\%} \quad (1)$$

The battery size defined how much was invested in the different types of batteries with their specific C-rates and kWh prices. The size of the inverter was directly derived from the maximum load of the secondary substation.

After knowing the battery and inverter size, the investment cost was calculated. Figure 4's upper side describes the method used for estimating the BES cost.

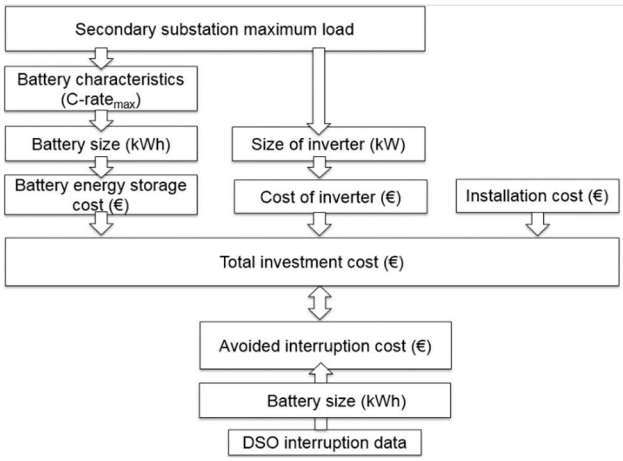

Figure 4. Method for estimating BES cost and benefit

Figure 4's lower side describes the BES benefit calculation. The BES size (equation 1) defined how long an interruption time was covered when BES was new. The average load of the secondary substation was considered to be half of the maximum load and it was used in the calculations to approximate the customer load during the

interruption.

The BES calendar age capacity degradation is proportional to $t^{1/2}$ [7]. The battery capacity was lowered for every year to take into account the effect of the degradation. LTO covers 20 min, LFP 2 h and NCA 6 h interruptions with the average load at the EOL and 25% more time during the first year of operation. In the calculations it was further assumed that the total amount of interruptions will lower steadily by 3% every year until 2028 due to the network reinvestments.

The yearly avoided CIC calculation is shown in equations 2a-3c. Equations 2b-2e are used if the outage is covered fully (2a), and equations 3b-3c if the outage is covered partly (3a). The b equation is selected with unexpected interruption, c with planned interruption, d in case of DAR and e in case of HSAR. Calculations assumed fault ride through functionality from the inverter. In the equations t means the outage time in hours.

$$if\ Battery\ Capacity \geq t \times ave.load \quad (2a)$$

$$Avoided\ CIC = \left(\frac{13.13\,€}{kWh} \times t + \frac{1.31€}{kW}\right) \times ave.load \quad (2b)$$

$$Avoided\ CIC = \left(\frac{8.12\,€}{kWh} \times t + \frac{0.60€}{kW}\right) \times ave.load \quad (2c)$$

$$Avoided\ CIC = \frac{1.31€}{kW} \times ave.load \quad (2d)$$

$$Avoided\ CIC = \frac{0.66€}{kW} \times ave.load \quad (2e)$$

$$if\ Battery\ Capacity < t \times ave.load \quad (3a)$$

$$Avoided\ CIC = \frac{13.13\,€}{kWh} \times Battery\ Capacity \quad (3b)$$

$$Avoided\ CIC = \frac{8.12\,€}{kWh} \times Battery\ Capacity \quad (3c)$$

RESULTS

Equipping all the 13,867 secondary substations in the rural area with the BES was not profitable and less than half of the investment was regained as saved CIC during the BES lifetime. After this the dataset was reduced to the most interruption prone secondary substations (i.e. 10% of the total count). The cash flow statement of investing in these 1,386 secondary substations are shown in Table 3. Positive Net Present Values (NPVs) mean that the investments are profitable. The cash flow shows the decreasing returns, because of the combined effect of battery degradation and the shrinking total amount of interruptions. The saved CIC in the future will have an automatic increase with the customer price index in the network business regulation model, which will negate the effect of the inflation. On top of this, a 3% discount rate was applied.

In Figure 5 the deviation of the 1,386 LV networks payback times is presented for NCA battery. The same 3% discount rate was applied for this figure. Inside this group there is still variation in profitability and some LV networks would have payback times even as short as 8 years.

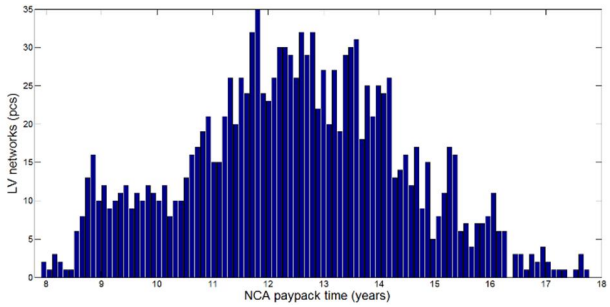

Figure 5. The NCA battery payback time deviation

Grid connection effect on profitability

Calculations assumed fault ride through functionality from the inverter. This kind of grid connection would require a specially designed inverter. The value of providing the solution was calculated to give a motivation for manufacturers to think how to arrange the connection.

The BES profitability will lower in case there is a break in the supply. This can be calculated to produce extra CIC equivalent to HSAR for interruptions that are otherwise covered. NPV would lower to -0.9 M€, -6.5 M€, -6.1 M€ for NCA, LFP and LTO respectively. Smaller batteries decrease more in profitability because the HSAR has a larger effect on their saved CIC.

In a case where the grid connection is made with the principle of Figure 2, the break is avoided but losses are increased for all of the energy transferred to the LV network. Calculating with 5% losses and 5 c/kWh loss energy price, the yearly losses would increase with 440 k€. NPV would lower to 4.3 M€, -2,5 M€, -3.8 M€ for NCA, LFP and LTO respectively.

Table 3. Cash flow statements of placing BES in the 1,386 most interruption prone secondary substations (numbers in M€)

NCA	**2017**	**2018**	**2019**	**2020**	**2021**	**2022**	**2023**	**2024**	**2025**	**2026**	**2027**	**2028**	**2029**	**2030**	**2031**
Cash flow	-42	5.7	5.5	5.3	5.1	4.9	4.7	4.5	4.4	4.3	4.1	4.0	3.9	3.8	3.8
NPV	9.7														
LFP	**2017**	**2018**	**2019**	**2020**	**2021**	**2022**	**2023**	**2024**	**2025**	**2026**	**2027**	**2028**	**2029**	**2030**	**2031**
Cash flow	-32	3.8	3.6	3.5	3.3	3.2	3.1	3.0	2.9	2.8	2.7	2.6	2.5	2.5	2.5
NPV	2.9														
LTO	**2017**	**2018**	**2019**	**2020**	**2021**	**2022**	**2023**	**2024**	**2025**	**2026**	**2027**	**2028**	**2029**	**…**	**2041**
Cash flow	-19	1.8	1.7	1.6	1.6	1.6	1.5	1.4	1.4	1.3	1.3	1.2	1.2	1.2	1.2
NPV	4.0														

DISCUSSION

It is not possible to know exactly where the future interruptions will occur. This is why a large amount of LV networks are included in the analysis. The historic data gives an estimation of where the interruptions are likely to happen. The historic data should be combined with the network planning when deciding the actual optimal locations. It might be difficult to forecast what parts of the grid will be reinforced after several years. The uncertainty aspects in the planning can be lowered with the transferability option of the battery and power electronics. The profitability of the BES can be increased by notifying the customers during outages in order to decrease their energy consumption. Profitability can also be increased considerably if BES can provide simultaneous capacity in the frequency restoration for the TSO reserve market purposes. Further research is being conducted in this matter.

CONCLUSION

Analyses show that using Li-ion batteries as back-up power in LV network has potential to be a profitable investment.

One of the crucial aspects of the BES profitability is that the location is selected carefully. This means that enough CIC will be avoided with the BES in the future. Network planning should be combined with historic data, when selecting the place.

The regulation rules are not designed for BES, which might slow down its adoption for the DSO. Before the actual installations, it would also be beneficial to find a solution for the grid connection that does not induce a break in the supply with a minimum amount of losses.

Overall, from the assessed batteries NCA gave the best result because of its low price. Higher prices of BES can be accepted if the calendar age of BES is longer or if the output power is higher.

REFERENCES

[1] T. Hakala, T. Lähdeaho, P. Järventausta, 2015, “The Utilization Potential of LVDC Distribution in a Large Distribution System Operator”, *IEEE Transactions on Power Delivery*, vol. 30, 1694-1701

[2] Finnish Electricity Market Act 588/2013

[3] T. Zhang, S. Cialdea, J. A. Orr, A. E. Emanuel, 2016, “Outage Avoidance and Amelioration Using Battery Energy Storage Systems” *IEEE Transactions on Industry Applications*, vol. 52, 5-10

[4] D. Wu, C. Jin, P. Balducci, M. Kintner-Meyer, 2015, "An Energy Storage Assessment: Using Optimal Control Strategies to Capture Multiple Services", *IEEE Power & Energy Society General Meeting, 1-5.*

[5] Finnish Energy Market Authority, “Appendix 2” – Regulation methods in the fourth regulatory period of 1 January 2016 – 31 December 2019 and the fifth regulatory period of 1 January 2020 – 31 December 2023 starting on 1 January 2012 and ending on 31. Electricity distribution network operations and for high-voltage distribution network operations.

[6] M.Armand, J.-M. Tarascon, 2008, “Building better batteries”, *Nature*, 451 652-657.

[7] D.-I. Stroe, M. Swierczynski, A.-I. Stan, R. Teodorescu, S-J. Andreasen, 2014, “Accelerated Lifetime Testing Methodology for Lifetime Estimation of Lithium Ion Batteries Used in Agmented Wind Power Plants.” *IEEE Transactions on Industry Applications*, vol.50, 4006-4017.

[8] J. Markkula, O. Vilppo, P. Järventausta, T. Hakala, T Lähdeaho, 2016. Profitability of different Li-ion batteries as back-up power in LVDC distribution network, *Proceedings Cired Workshop*, Helsinki, vol.1, 187-190.

[9] Sinopoli 300 Ah-cell datasheet

[10] Altairnano “Power Rack” product data sheet www.altairnano.com/products/powerrack

[11] Tesla Power Wall data sheet

http://www.teslamotors.com/powerwall

[12] Tesla first quarter 2015 shareholder letter (power pack price).