STRATEGIC INTERCONNECTED NETWORK TRANSITIONING

Malcolm BEBBINGTON
SP Energy Networks – UK
Malcolm.Bebbington2@spenergynetworks.co.uk

Russell BRYANS
TNEI Services Ltd – UK
Russ.Bryans@tnei.co.uk

Alberto ELENA DE LEONARDO
SP Energy Networks – UK
Aelena@spenergynetworks.co.uk

ABSTRACT

This paper outlines the long-term strategy that the UK Distribution Network Operator (DNO) SP Energy Networks (SPEN) has developed in its SP Manweb licence area, to prepare its network to facilitate a low carbon future.

The strategy aims to enhance the embedded benefits of interconnection; to transition the interconnected network at the fringes where the benefits are less; and to reduce the cost of interconnected network extensions.

This paper predominantly focuses on a blueprint design for transitioning the fringes of the SP Manweb interconnected network to a new lower cost design making use of, and driving new technologies. Certain areas of network have been selected to trial this design over the next few years.

INTRODUCTION

SP Energy Networks (SPEN) owns and operates the SP Manweb (SPM) distribution network. This network serves 1.5 million customers in the North West of England and North Wales, with a maximum demand of 3GW and around 1.5GW of renewable generation.

The network serves densely populated areas such as Liverpool and rural areas throughout Wales. The SP Manweb network is meshed with interconnection at all voltage levels. This is fundamentally different from other DNOs in the UK, which are generally organised as radial systems.

The design philosophy is based on high transformer utilisation, where smaller single transformer substations supply power into an interconnected mesh where standard cable sizes are used throughout. Each voltage layer provides support to the voltage layer immediately above (LV, HV, EHV and 132 kV) offering a fully integrated and interconnected network.

Figure 1 shows a typical industry network and consists of two 33/11kV transformers typically rated at 12/24 MVA feeding a single busbar with radial circuits operating to split points. In the event of a fault, the source circuit breaker will open and the circuit is de-energised until the fault is manually isolated and the supplies are restored.

The SP Manweb network consists of a greater number of smaller 33/11kV transformers with more switchgear and protection. 33/11kV transformers are typically rated at 7.5MVA feeding a single busbar with interconnected circuits. The HV/LV substations are configured in unit protected zones avoiding the loss of supplies during fault conditions. For example protection would isolate an 11kV cable section and HV/LV transformer, yet the LV supplies would not be interrupted because of the level of LV interconnection. The size of mains cable and transformer sizes have been standardised. The network is built around the principle that the load a network can serve can be increased by adding additional supply in-feeds near demand centres within the mesh.

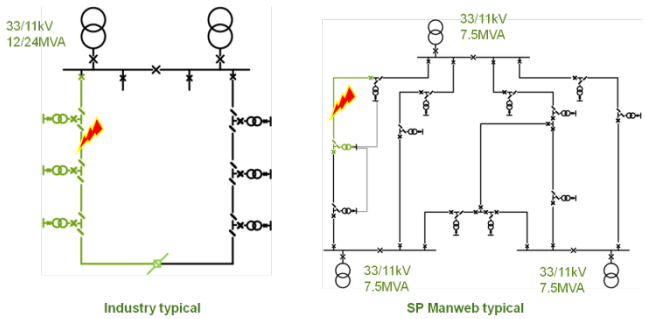

Figure 1 – Industry Typical Network vs SP Manweb

BENEFITS OF INTERCONNECTION

The interconnected design philosophy brings significant benefits, such as higher reliability, increased asset utilisation and increased flexibility to accommodate new connections, however the costs are greater due to additional plant and protection equipment. In the majority of the network the benefits of interconnection outweigh the additional cost.

The main benefits of the existing design philosophy in the SPM network are:

- **Higher network reliability** - The SPM network offers the best network performance in the UK with the highest level of network reliability in the UK outside of the London interconnected cable network. Within SPM, the unit protected network offers the best reliability, which is two

times better than the London network and 4.5 times better than the UK average.

- **Higher utilisation of assets** - In traditional radial substations matched pairs of transformers are used to provide security for single outages. This limits the firm capacity to the size of one transformer i.e. utilisation of up to 50%. In a meshed network, the capacity is dependent on the number of transformers supplying the mesh and can be much higher than 50%.

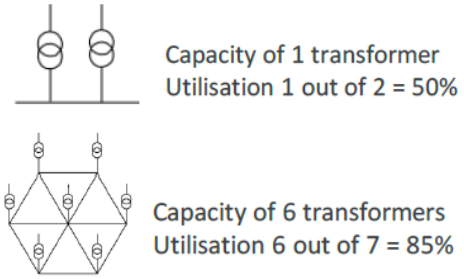

Figure 2 - Transformer utilisation in radial / meshed network

- **More flexible / adaptable** - A meshed network has many more possibilities to operationally reconfigure to be able to redistribute demand and generation more uniformly across the network. This can, in many cases, lead to a meshed network being more robust and capable in accommodating changes in load patterns and load locations.

- **Standard components sizes** - The SPM network uses standardised network components throughout. Grid transformers are generally either 45MVA or 60MVA. Primary transformers are generally 7.5/10MVA. Similarly, conductors do not taper along the length of feeders and generally only approximately two sizes are used for new build equipment. This drives economies of scale for both purchasing and spares.

- **Smaller growth increments** - Grid and primary transformers are smaller than would be expected in a radial network; however there are generally more of them. This, coupled with the higher flexibility, leads to smaller growth increments being possible in the meshed network. This may be expected to have benefits, particularly for Low Carbon Technologies (LCT) growth, as smaller reinforcement projects can be implemented reasonably quickly, which defer the larger investments and give time for the demand / generation to grow and optimal design of larger projects.

CHALLENGES OF INTERCONNECTION

In spite of all the benefits associated with it, the existing design philosophy faces some key challenges:

- **Cost** - The meshed design philosophy has significantly increased capital and operational expenditures. The reinforcement costs in the SPM interconnected network are generally greater than in a radial equivalent. Unit protection in HV feeders requires complex protection systems including pilot wires, HV protection panels including backup batteries and an LV air-breaking circuit breaker. The additional substation equipment requires the substation to be of brick-built construction. This is more costly than a pre-fabricated glass reinforced plastic (GRP) enclosure.

- **Complexity** - The interconnected network is more complex to design, develop, operate and maintain. This requires specialist staff.

- **Connections / extensions** – Increased cost and complexity leads to increased connection costs and costs of network extensions / reinforcement.

LONG-TERM STRATEGY

SPEN has established a long-term strategy to develop the SPM network to facilitate a low carbon future. The strategy aims to enhance the embedded benefits of interconnection; to transition the interconnected network at the fringes where the benefits are less; and to reduce the cost of interconnected network extensions.

Full transition to a radial network is not economically viable at an estimated cost of £5Bn - £7Bn. The present configuration of the system with single transformer substations and high asset utilisations would require circuits to be overlaid and additional transformers in most substations.

Furthermore, a transition to a traditional radial network would remove the significant embedded performance benefits arising from the interconnected network. The other UK DNOs recognise the benefits of an interconnected network and have been working to achieve these benefits through various innovation projects to trial different interconnection techniques.

The SPM long-term strategy seeks to maintain and enhance the benefits of the interconnected network, whilst reducing the gap with industry average costs. This will be achieved by:

- **Enhancing the benefits of interconnection** –In the majority of the network the benefits of interconnection outweigh the additional costs.

Therefore this aims to maximise the network benefits by incorporating new technologies such as Active Network Management, Power Flow Controllers and advanced active management of voltage within the mesh.

- **Transitioning the "fringes" of the network** – In the "fringes" of the SPM network, the embedded benefits of interconnection are reduced due to network topology. This might include feeders with mixed unit and non-unit protection where the security of supply benefits are not as great, or possibly areas of low energy density where unit protected network is used to serve a relatively lower number of customers. In these areas, the interconnected network will transition to a new hybrid form of network to reduce cost, yet maintaining similar network performance. This paper outlines a blueprint design for this transitioning and makes use of less complex protection equipment coupled with automation at both HV and LV.

- **Reducing Cost of Network Extensions** – Design solutions are also being developed to reduce the cost of connecting into or extending the interconnected network.

Together these aim to reduce the gap with industry average costs through innovation to provide a network that will facilitate a low carbon future.

EXISTING PROTECTION ARRANGEMENTS

On the SPM HV network there are two different ways that interconnection is implemented, depending upon the type of HV ring main unit (RMU) that is used: 'X type' or 'Y type'.

- **'X type'** RMUs allow unit protection to be used and the resulting network is fully meshed, with LV circuits able to interconnect between HV feeders as well as along their length.

- **'Y type'** RMUs may have LV interconnection along their length, though some types of faults can result in a loss of supply until switching occurs.

The LV network designs therefore range from little or no interconnection in rural areas through fully interconnected designs underneath multiple HV feeders. The level and complexity of LV interconnection is usually dictated by the HV supply arrangements, with interconnection only under 'X type' or 'Y type' RMUs. Any single LV feeder is limited to having only three in-feeds.

These arrangements are shown in Figure 3.

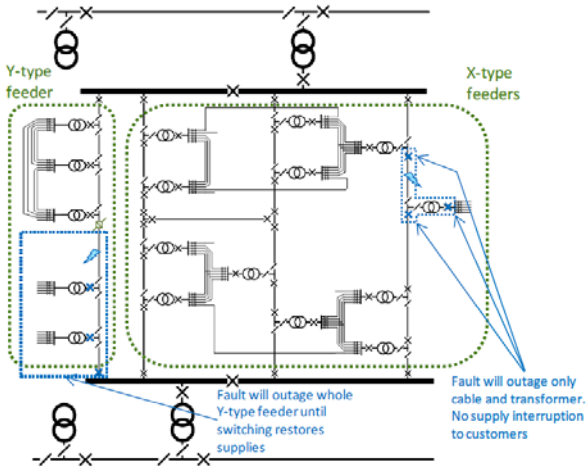

Figure 3 – Typical SPM 'X' and 'Y' Type HV feeders

BLUEPRINT DESIGN FOR TRANSITIONING

SPEN has developed a hybrid network design solution that migrates the higher cost X-type network to lower cost Y-type with increased automation and monitoring to maintain the benefits of interconnection at a lower cost.

The first trial of this blueprint transitioning design is in progress and is shown in Figure 4. It involves transitioning an HV network group of 50 HV/LV transformers which supply circa 9,000 customers.

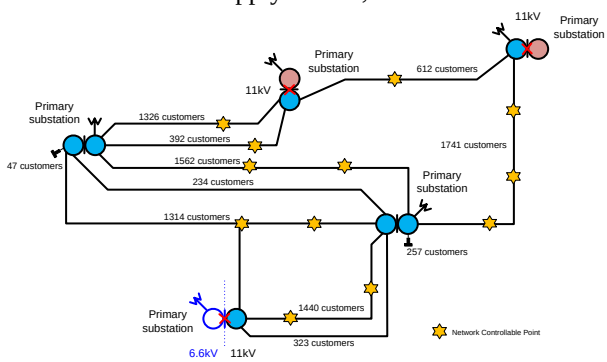

Figure 4 – Network Trial

This trial area has been chosen as it is a sub-urban network with HV circuits being predominantly mixed unit and non-unit protection within the same circuit. In these areas the benefits of interconnection are reduced. Delivery will be in conjunction with asset replacement to avoid additional expenditure or removing assets that are not end of life.

This mixed type of network does not normally provide the full network performance benefits associated with unit protected networks, but still represents a higher lifecycle expense. Consequently, replacing the like for like 'X-type' ring main units in the interconnector does not appear to be the most cost efficient solution in the long term.

The conversion from 'X-type' to 'Y-type' with advanced network controllable points (NCPs) and automation will significantly improve the performance of a non-unit protected interconnected feeder at an industry average cost whilst keeping the benefits of a meshed network.

The trial scheme will also impact the network arrangements at LV. Any LV feeders interconnecting between HV feeders would need to be identified and split points will be introduced. Any LV feeders interconnecting underneath an HV NCP would require either permanent split points to be introduced, or the introduction of smart LV sectionalisers.

Network Automation

This hybrid network design solution will integrate automation into fully interconnected HV feeders with solid interconnection at HV and LV. This is made possible by the use of new technology. This configuration applies to HV feeders with 'Y type' RMUs and no unit protection.

Historically SPEN has used network automation to improve system performance by remotely operating switchgear through logical sequential switching (LSS) algorithms. This has typically entailed retrofitting switchgear with actuators and remote terminal units (RTUs) with radio communications to enable network controllable points (NCPs).

LSS algorithms reside centrally within the Operational Control Centre (OCC). These algorithms automatically operate switchgear by remote control under specific circuit conditions e.g. operation of a circuit breaker, signals from fault passage indicators (FPIs) and detection of loss of volts. The automation schemes aim to restore customer supplies in under 3 minutes to improve Customer Interruption (CI) performance.

To date these automation schemes have been exclusively deployed on HV radial feeders, usually rural, which are operated with normally open points between single transformer primary substations. These schemes effectively make use of FPIs to indicate the presence of fault current and automatically move the open point accordingly to resupply an area of HV circuit from its remote end.

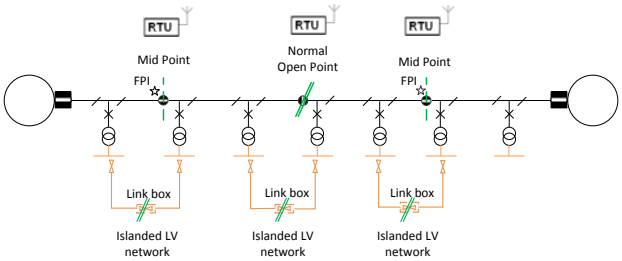

Figure 5 – Typical automated HV radial feeder

Automated interconnected network

Key enablers to the automated interconnected configuration are directional fault passage indicators (dFPIs) and smart LV sectionalisers. Effectively, dFPIs are required to isolate the faulty section as there is no normally open point in an interconnector. Smart LV sectionalisers are required to prevent back-feed of HV faults through the LV network. These sectionalisers partition the LV network under fault conditions.

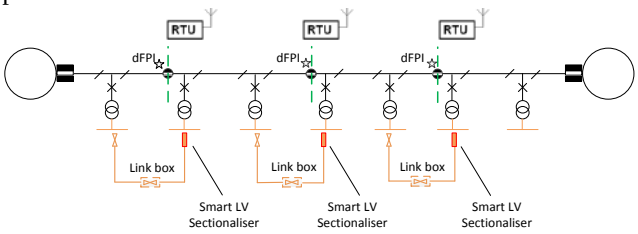

Figure 6 – Automated HV interconnected feeder

The smart LV sectionalisers automatically perform an event driven intervention without requiring direct control from the OCC. They sectionalise all three phases for the detection of a loss of power and report on their status to the RTU. They reclose after the detection of voltage and the correct phasing on all three phases.

In this configuration HV faults result in a loss of supply in the whole feeder. The indications of direction of fault current from the dFPIs make it possible to identify the section of the feeder where the fault is located. These indications feed into the LSS algorithm.

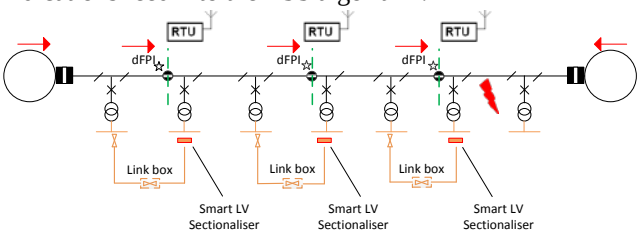

Figure 7 – Fault clearance in non-unit protected HV interconnected feeder

The LSS algorithm only operates HV switchgear remotely after confirmation that the right status of the smart LV sectionalisers prevents any HV fault back-feed through the LV network. Thereafter, it isolates the faulty section and restores 75% of supplies in less than 3 minutes.

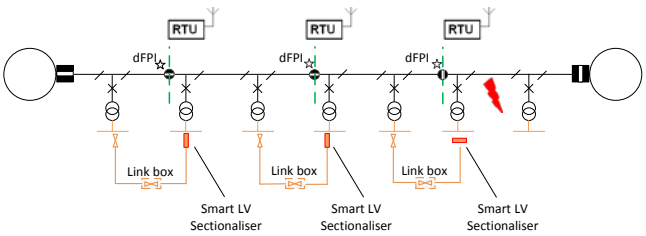

Figure 8 – Automated fault isolation in non-unit protected HV interconnected feeder

CONCLUSIONS

The SPM long-term strategy aims to enhance the embedded benefits of interconnection; to transition the interconnected network at the fringes where the benefits are less; and to reduce the cost of interconnected network extensions.

A design solution for transitioning the fringes of the interconnected network has been developed and will be trialled over the next few years.

Once proven, this hybrid network design solution will enable the long-term transitioning of network comprising a mixture of unit protected and non-unit protected HV feeders. To be cost efficient, the strategic transitioning works will be combined with targeting areas of network with high proportions of RMUs approaching end of life. This couples the transitioning with asset replacement schemes.

Migration of older mixed 'X-Y-type' network to automated 'Y-type' is expected to facilitate reduced costs in future. These are associated with both CapEx through lower cost network extensions and through OpEx by avoiding battery replacements and pilot faults. It will lead to lower future asset replacement costs.

This blueprint should lead to lower customer connection costs, reduced general reinforcement costs and should help SPEN develop its network to facilitate a low carbon future.

REFERENCES

[1] A. Jones, 2014, *SP Energy Networks 2015-2023 Business Plan*, Annex "SP Manweb Company Specific Factors".

[2] Parsons Brinckerhoff (PB Power), 2014, *Assessment of Special Case for SP Manweb Operating an Interconnected Network*.

[3] Mott MacDonald, 2014, *Assessment of Special Case for SP Manweb Operating an Interconnected Network*.