A NEW SMART DISTRIBUTION TRANSFORMER WITH OLTC FOR LOW CARBON TECHNOLOGIES INTEGRATION

Luis DEL RÍO ETAYO
ORMAZABAL Corp. Tech. – Spain
lre@ormazabal.com

Pablo CIRUJANO
ORMAZABAL COTRADIS – Spain
pcb@ormazabal.com

Patrick LAUZEVIS
ENEDIS – France
patrick.lauzevis@enedis.fr

Gonzalo PEREZ DE NANCLARES
ORMAZABAL COTRADIS – Spain
gpn@ormazabal.com

Asier SOTO
ORMAZABAL Corp. Tech. – Spain
asd@ormazabal.com

Alena ULASENKA
ORMAZABAL Corp. Tech. – Spain
becid@ormazabal.com

ABSTRACT

Over the past decade, there has been a rising awareness of use of renewable energy sources (RES) and the extension of such matters as reduction of CO_2 emissions and energy consumption becoming worldwide issues. Low carbon technologies (LCT), such as electric vehicles (EV) and distributed generators (DG), can contribute to fulfil the objectives of limiting global warming. The development of a new compact smart distribution transformer with an On-Load Tap Changer (OLTC), in collaboration with ENEDIS Technical Direction, keeps the voltage stable in distribution grids by compensating voltages instabilities in the medium voltage (MV) and can help the integration of LCT by regulating the voltage automatically to cope with the voltage fluctuations generated by new loads and DG in the low voltage (LV) side of the electric network. The smart transformer operation has been tested first in a new 'laboratory' called Demonstration and Experimentation Unit (UDEX), and afterwards in an ENEDIS rural network, within the SMAP project, where new technologies for the integration of RES in rural smart grids are assessed.

INTRODUCTION

The penetration of RES is expected to increase over the next decades. This potential rise is promoted in Europe by the European Initiative ´20-20-20´ [1][1], and globally by the last United Nations Climate Change Conference in Paris (December, 2015) [2][2]. To fulfil their commitments, lot of countries have set targets and policies to stimulate the development and integration of renewable energy into the electrical system [3]. Furthermore, the advancement in renewable energy technologies and engineering has boosted significantly the investment in clean energy, helping the deployment of RES [4]. In 2015, renewable energy expanded significantly in terms of capacity installed and energy produced, with renewable energy investments in the power sector outpacing net investments in fossil fuel power plants [3].

Furthermore, EV integration will be also an issue for the electric utilities. Whilst the integration of RES in the LV side of the network is causing overvoltages, the implementation of additional loads in the LV, such as EV, could cause voltage dips.

As the European standard EN 50160 [5] defines the voltage requirements in distribution grids, and requires that the voltage stays within a band of +/- 10% of the nominal voltage. The compliance with these statutory voltage limits would require a grid extension.

A smart distribution transformer with OLTC can keep the voltage inside the statutory limits by changing automatically the tap of the transformer, avoiding or minimizing the need of a conventional grid reinforcement [6, 7], and allowing further integration of distributed RES and EV [8, 9].

As functional testing of new solutions for voltage control is complicated in real networks, the research to assess the operation of the smart distribution transformer has been done in a new 'laboratory', UDEX, which consists in a real grid designed as a platform for the research of new products for the smart grids [10]. Network operators require high reliability products with predictable behaviour to guarantee the correct operation of the grid.
Afterwards, a smart transformer has been installed in an ENEDIS rural network, within the SMAP project, where new technologies for the integration of RES in rural smart grids are assessed.

SMAP PROJECT

SMAP is the first rural smart grid demonstrator project where smart grid solutions are tested to avoid or limit network reinforcement cost linked with photovoltaic (PV) deployment.

This project targets to facilitate renewable energies in rural areas, and for develop and test innovative solutions,

[1] *To reduce CO2 emissions by 20%, to reduce primary energy use by 20%, and to increase renewable energies by 20%.*

[2] *Primarily aimed at reducing global greenhouse gas emissions, setting a goal of limiting global warming to less than 2 degrees Celsius (°C) compared to pre-industrial levels.*

such as the smart distribution transformer (see Figure 1), leaning on the *Centrales Villageoises*[3] from *Les Haies* village (772 inhabitants) in coherence with territories policy. There is a strong dependence between PV generation and voltage owing to low volume of consumers on the network.

Trials and results will have influence on smart grid industrialization methodology.

The 3 main issues are:

• Optimization of renewable energies development in low voltage electricity network in rural areas without any major impact on networks.

• Improvement of the balance between local consumption flows and local electricity generation.

• Citizen awareness to energy management and change behavior management across their active implication for a local project with national and international economic impacts.

Figure 1. Smart Transformer location in Les Haies.

VOLTAGE REGULATION

As RES are developing very quickly, and they are very volatile, keeping the necessary system stability is becoming a challenging task: whilst the integration of RES in the LV side of the network is causing overvoltages, the implementation of additional loads in the LV (such as the EV) could cause voltage dips.

The new smart transformer can adjust the downstream voltages keeping them within statutory limits [5].

SMART DISTRIBUTION TRANSFORMER WITH OLTC

The described solution is based on a electromechanical OLTC that is able to change the tap position automatically, and with load, by means of a combination of fixed and movable contacts, along with a set of vacuum interrupters (two per phase) on the MV side of the transformer. The vacuum interrupters guarantee that the tap changing is performed safely because the arc, promoted by the switching process, is located inside the vacuum bottle - preventing oil pollution (see Fig. 2).

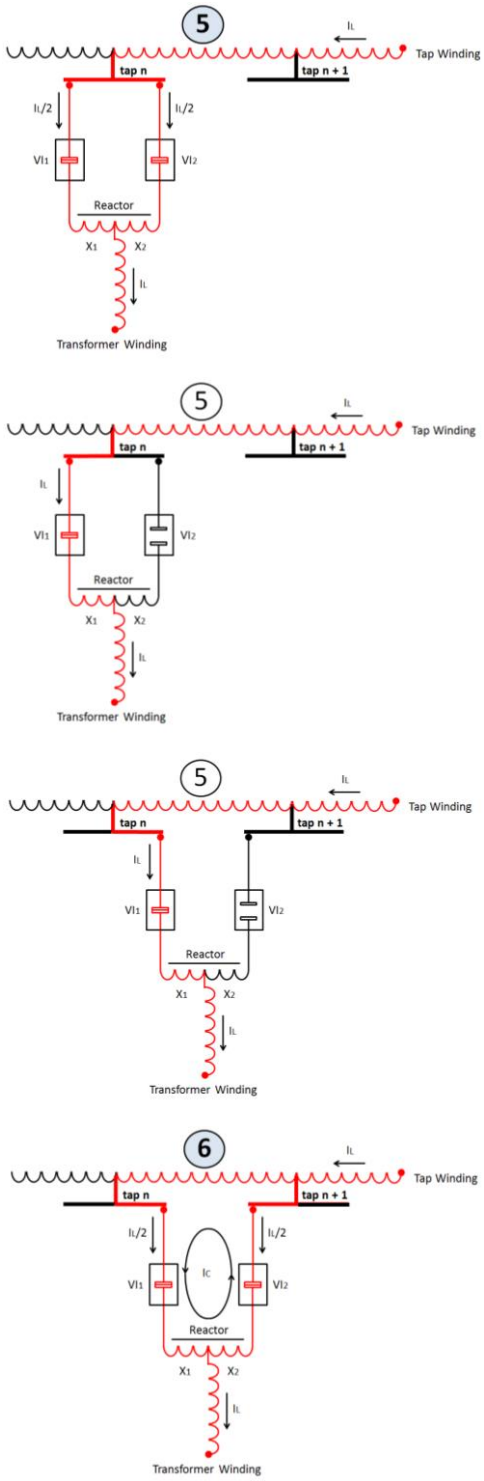

Figure 2. Voltage regulation with vacuum interrupters, movable contacts and reactors (tap-change from position 5 to position 6).

[3] *The Centrales Villageoises are local companies which develop renewable energies in a territory combining citizens, local government and local actors.*

The OLTC changes the ratio of the transformer by adding or subtracting turns from the MV winding. A transition impedance bridges adjacent taps for the purpose of transferring load from one tap to the other without interruption or appreciable change in the load current. Besides, they limit the circulating current allowing, in the case of reactors, continuous loading.

The smart distribution transformer complies with the IEC 60076 – Power Transformers [11], IEC 60214 – Tap-Changers [12], IEC 61000 – Electromagnetic Compatibility (EMC) [13], along with the eco-design EU Directive No. 548/2014 [14]. It also can use high fire resistant biodegradable ester oil instead of mineral oil.

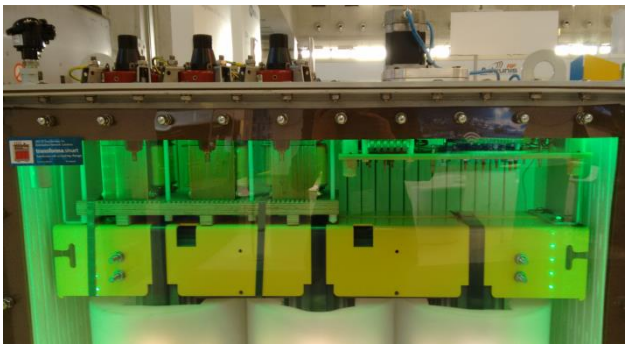

Figure 3. Smart Distribution Transformer internal view.

The flat design of the OLTC (Fig. 3&4) allows a compact solution, keeping the footprint of a conventional distribution transformer (to allow retrofitting).

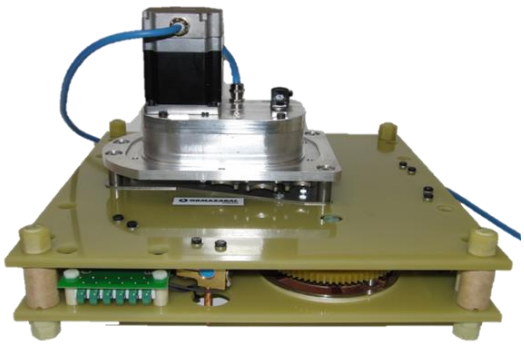

Figure 4. On-Load Tap Changer.

TESTS

As functional testing of new solutions for voltage control is complicated in real networks, the research to assess the operation of the smart distribution transformer has been initially done in a 'laboratory', UDEX, which consists of a real grid designed as a platform for the research of new products for smart grids.

After this first assessment, the new smart distribution transformer has been installed in a smart grid demonstrator for rural areas, the SMAP project, to cope with the voltage fluctuations caused by the RES installed in the LV side.

UDEX – Smart grid technologies laboratory

The main purpose of the UDEX is to make experiments in a real MV/LV network having a high flexibility, independent of the utility networks, for the development and testing of new technologies. It is able to reproduce normal conditions of existing worldwide networks as well as anomalous situations, such as MV instabilities or LV fluctuations due to LCT integration.

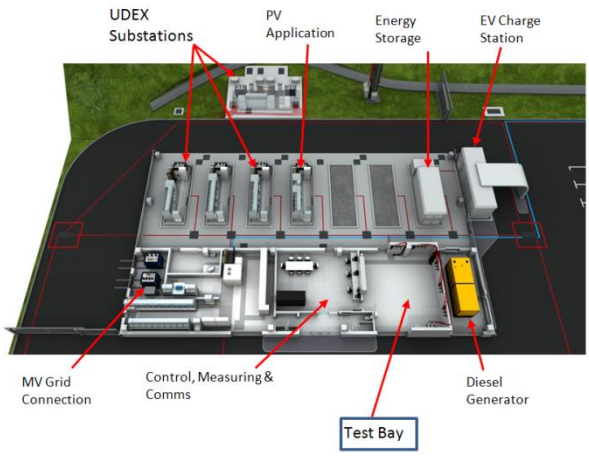

Figure 5. UDEX top view. Solar roof and EV charge station.

This concept of a highly configurable MV network for development and testing of new technologies not only contemplates equipment testing, as with standard laboratory testing, but also embraces solutions and applications for network infrastructures, such as the smart distribution transformer.

Tests configuration

The smart distribution transformer is placed in the UDEX test bay.

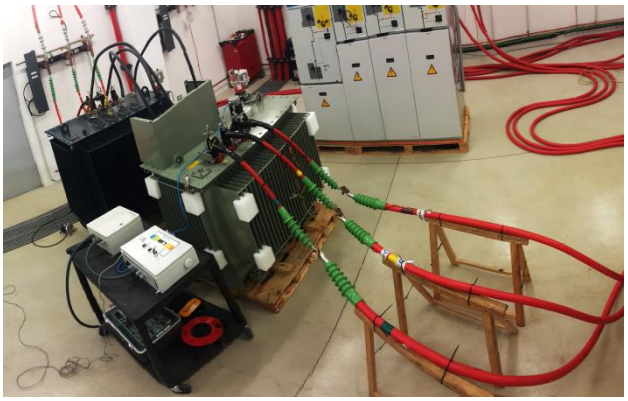

Figure 6. Smart Distribution Transformer during operation test in the UDEX test bay.

The UDEX is connected to a 36kV utility grid and is adjusted, by means of an autotransformer, to 24kV. The smart transformer is connected to the LV side by means of a back-to-back connection. CT3 load (72,80 kVAr) is connected and disconnected to promote LV drops and rises.

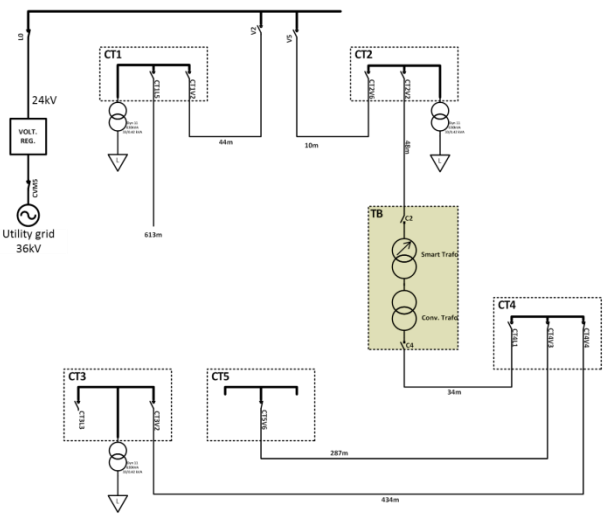

Figure 7. UDEX operation test general lay-out with the smart transformer in the Test Bay.

Therefore, two tests are carried out in order to assess the smart transformer operation under LV fluctuations:

Test 1. Voltage drop

A voltage drop in the LV is created by adding an extra load in the LV network: CT3 load is connected.

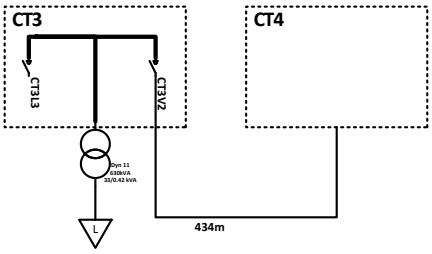

Figure 8. CT3 connection.

Test 2. Voltage rise

A voltage rise in the LV is created by disconnecting the CT3 load.

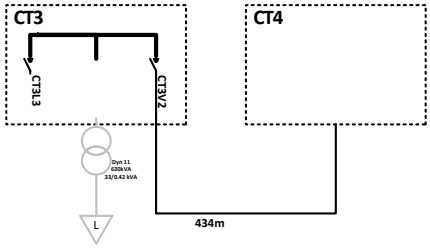

Figure 9. CT3 disconnection.

Results and discussions

The smart distribution transformer operation has been assessed by means of two tests where LV voltage fluctuations were reproduced. The smart distribution transformer showed its capability to cope with voltage variations keeping the low voltage stable.

Test 1. Voltage drop

The smart transformer monitoring system is able to detect such voltage drops actuating the associated OLTC to raise the voltage.

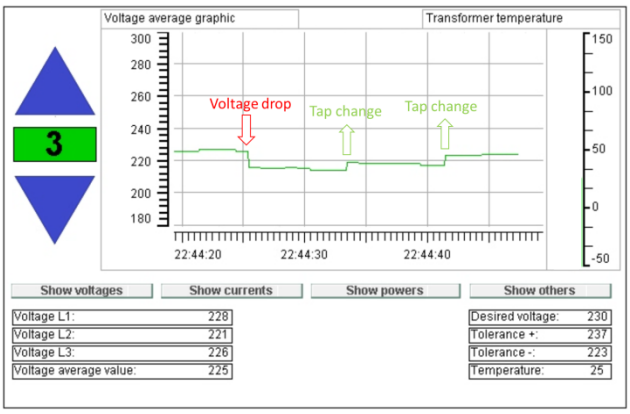

Figure 10. Voltage drop and smart transformer voltage recovery during Test 1.

Test 2. Voltage rise

The smart transformer monitoring system is able to detect such voltage rises actuating the associated OLTC to lower the voltage.

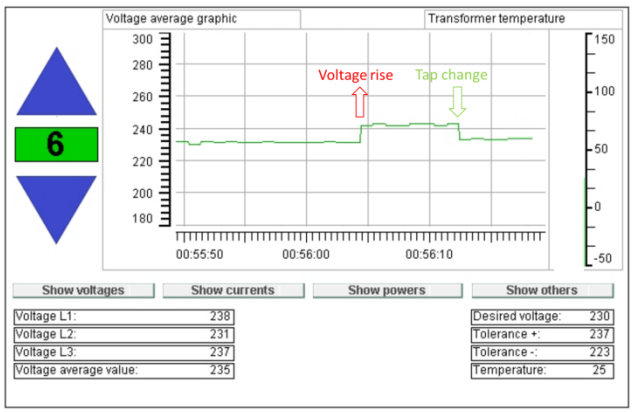

Figure 11. Voltage rise and smart transformer voltage recovery during Test 2.

CONCLUSIONS

The capability to control the voltage of a new compact smart distribution transformer with OLTC has been tested in a research network, UDEX, under anomalous situations such as voltage fluctuations. The tested smart transformer has been installed within the SMAP project where new technologies for the integration of RES in rural smart grids are assessed.

The performed tests and assessments showed that the new smart distribution transformer is able to cope with voltage instabilities and fluctuations, keeping the voltage within the statutory limits.

The smart distribution transformer can be considered an essential element of the network that can provide optimal grid flexibilities and reliability.

Acknowledgments

The authors of this research work wish to acknowledge I. Orue and N. Akroud for their help with the experimental set-up and measurements.

REFERENCES

[1] The "20-20-20" targets, Overview of EU climate and energy policies.

[2] COP21, Paris Climate Conference, 2015.

[3] Ren21's, Renewables 2013, Global Status Report.

[4] UNEP Collaborating Centre for Climate & Sustainable Energy Finance, Global Trends in Renewable Energy Investment 2014.

[5] EN 50160:2011. Voltage characteristics of electricity supplied by public distribution systems.

[6] J. Schmiesing, H. Beck, T. Smolka, M. Sojer. *Avoiding MV-Network Expansion by Distributed Voltage Control*, in the 22nd International Conference on Electricity Distribution, Jun 2013.

[7] T. Smolka, D. Dohnal, M. Sojer, R. Heiliger, J. Schmiesing, T. Hug, F. Sutter. *Advanced Grid Integration of Dispersed Generation by using Voltage Regulated Distribution Transformers (VRDT) – Experiences from field tests and potentials for minimizing network expansion*. CIGRE Session 2014.

[8] T. Drizard, C. Lebosse, B. Chazottes. *Integration of Distributed PV Generation: The Nice Grid Project*, in the 23rd International Conference on Electricity Distribution, Jun 2015.

[9] S. Huang, J. Pillai, M. Liserre, B. Bak-Jensen. *Improving photovoltaic and electric vehicle penetration in distribution grids with smart transformer*. IEEE PES Innovative Smart Grid Technologies Europe 2013.

[10] I. Orue, I. Gilbert, J. Larrieta, J.A. Sánchez, *Making Faults to Protect Power Networks*, paper nº 0161, CIRED Worshop – Helsinki 14-15 June 2016.

[11] IEC standard 60076-1:2011. Power transformers.

[12] IEC standard 60214-1:2014. Tap-changers.

[13] IEC standard 61000-4-1. Electromagnetic compatibility (EMC).

[14] Commission Regulation (EU) No 548/2014 of 21 May 2014 on implementing Directive 2009/125/EC of the European Parliament and of the Council with regard to small, medium and large power transformers.