DESIGN AND SUCCESSFUL UTILIZATION OF THE FIRST MULTI-PURPOSE MOBILE DISTRIBUTED ENERGY STORAGE SYSTEM IN IRAN

Naser Nakhodchi
MEEDC - Iran
n.nakhodchi@meedc.net

Navid Aghli
MEEDC - Iran
navid_Aghli@yahoo.com

SaeedAlishahi
MEEDC - Iran
s.alishahi@meedc.net

Morteza Hossein Pourarab
MEEDC - Iran
mhpourarab@gmail.com

ABSTRACT

Providing uninterruptable electric power for customers is the final goal for power utilities and they do their best to minimal their SAIDI index. In this paper a mobile battery energy storage system is presented which is designed and utilized in Mashhad Electric Energy Distribution Co. (MEEDC) and is called BEST (Battery Energy Storage Technology). What is unique and profoundly important about BEST is its flexibility to take advantage of multiple benefits from a single device. BEST provides the opportunity to store energy from the electricity grid and return it when required. This offers a huge range of options to strengthen and enhance the performance, quality and reliability of smart electricity grids.

INTRODUCTION

There are many causes of power outage in an electricity network that can be classified in two main categories; planned outage and unplanned outage. Unplanned outages caused by many unexpected events such as traffic accidents, damage to power lines, and most commonly storms and high winds. Using equipment with robust and reliable performance, performing periodical network inspection, using covered cable for overhead line are solutions to reduce the unplanned outage.

Planned outages are types of outages which are caused by grid operator for performing O&M operation on an electricity network. Right planning, utilizing hot line methods for maintenance operations and using diesel generator as a temporary power supply for supplying power to costumer during the operation time in distribution networks.

Nowadays energy storage plays a crucial and multi-functional role in power distribution networks. New trends in utility peak load shaving, energy efficiency, and load management need energy storage. Smart grid implementation, grid stabilization and utility reliability require energy storage as well. Portable storage devices can cover lack of utility power during planned or forced outages of distribution systems. This opens up a world of applications and possibilities for utilities and customers alike.

Other factors driving the introduction of storage technologies include reducing environmental impacts, solving the challenges of increased use of renewable energy systems, and enhancing energy security measures.

These issues are all key targets of implementing a decentralized battery energy storage system. MEEDC's solution to achieve aforementioned objectives is called BEST (Battery Energy Storage Technology). What is unique and profoundly important about BEST is its flexibility to take advantage of multiple benefits from a single device. BEST provides the opportunity to store energy from the electricity grid and return it when required. This offers a huge range of options to strengthen and enhance the performance, quality and reliability of smart electricity grids.

OUTAGE REDUCTION METHODS IN DISTRIBUTION NETWORKS

Distribution reliability is depended on fault frequency and outage time. All methods that can reduce fault frequency and outage time will result in reliability improvement. “The average failure frequency can be reduced by using components with lower failure rates, e.g. replacing overhead lines with underground cables, improving the maintenance program and using network reclosers.

Using distribution automation in networks

(e.g. remote controlled disconnectors), supply restoration equipment (e.g. temporary cables and mobile generation units) or personnel training, the average interruption duration will be reduced” [1]. Performing O&M activity using hotline (live-line) methods helps utilities to reduce their planned outage time. Sometimes it is not possible to do the job using hotline methods and it is necessary to disconnect the power. In these cases utilities utilize mobile generation units such as diesel generators to minimal the outage time for their customers in the area affected by this failure or maintenance activity.

Beside the advantage of using diesel generator in improving network reliability it has number of disadvantages as below:

- It uses fossil fuel which is not environment-friendly.
- It produces so much noise and it is not possible to use it in quiet zones like hospitals.
- It has high depreciation rate and low efficiency.
- Its start-up time is considerable.
- There is risk of fire because of its fuel.

ENERGY STORAGE SYSTEMS

Global electricity generation and consumption has grown rapidly over the last decades and a penetration of renewable energy has an upward trend which introduced new challenges in energy generation and load balance.

“Great efforts have been made in searching for viable solutions, including Electrical Energy Storage (EES), load shifting through demand management,

interconnection with external grids, etc. Amongst all the possible solutions, EES has been recognized as one of the most promising approaches" [2] .EES technology refers to the process of converting energy from one form (mainly electrical energy) to a storable form and reserving it in various mediums; then the stored energy can be converted back into electrical energy when needed [3] and [4].

EES technologies can be categorized in terms of their functions, response times, and suitable storage durations or based on the form of energy stored in the system. From last aspect, EES technologies can be categorized into mechanical (pumped hydroelectric storage, compressed air energy storage and flywheels), electrochemical (conventional rechargeable batteries and flow batteries), electrical (capacitors, supercapacitors and superconducting magnetic energy storage), thermochemical (solar fuels), chemical (hydrogen storage with fuel cells) and thermal energy storage (sensible heat storage and latent heat storage).

Based on specification of each system there are variety of application for EES. Some application of EES technogies are listed below.

- Integration of renewable power generation
- Emergency and telecommunications back-up power
- Ramping and load following
- Time shifting
- Peak shaving and load levelling
- Seasonal energy storage
- Low voltage ride-through
- Transmission and distribution stabilization
- Black-start
- Voltage regulation and control
- Grid/network fluctuation suppression
- Spinning reserve
- Uninterruptible Power Supply (UPS)
- Standing reserve

To replace diesel generator, MEEDC introduced decentralized battery energy storage system called BEST (Battery Energy Storage Technology) as a mobile generation unit.

"BEST" INTRODUCTION

BEST is a mobile battery storage system that can provide the opportunity to store energy from the electricity grid and return it when required. In case of performing maintenance activity which is not possible using hotline methods, it can provide electric power for customer during maintenance time and eliminate planned outage.

Storage system is assembled on a truck and has the possibility to move everywhere it is needed.

Figure 1. BEST Vehicle

BEST Components

Best has different components as listed below:

Truck

All Energy Storage System are assembled inside a box which is placed on a light-duty truck to has an acceptable mobility and can move as close as possible to the locations it is needed.

Container

Different aspect should be considered for designing the container which keeps all components. The placement of the batteries is the most important one. As shown in Figure 2, battery racks are used for easy containerization. Each rack is furnished with 16 batteries that could be upgraded to 32 batteries. By utilizing a split cooler batteries are kept in a cool, dry and properly ventilated area to improve its life time and prevent damage or explosion of the batteries.

The placement of components is done in a way to have easy access to all of them. Container has also emergency light and fire extinguishers.

Energy Storage System

A number of battery technologies exist for use as utility-scale energy storage facilities. Primarily, these installations have been lead-acid batteries, but other battery technologies like sodium sulfur (NaS) and Lithium ion are quickly be-coming commercially available.

BEST is furnished by 32 sealed lead acid battery cells with a minimum operating voltage of 384 VDC. This is the minimum DC-link voltage where the inverter must be able to deliver the rated output power of 40 kVA. Moreover, this system can be operated in parallel in order to achieve higher power ratings. Each battery has the capacity of 100 Ah .

Distribution Panel

Distribution panel consists of AC and DC breakers, a cold start operation kit, ammeters and synchronization signals.

Figure 2. Battery racks

Figure 3. Power converter inside the cabin

Control Unit

The entire control parts of BEST are state-of-the-art power electronic devices. It utilized double conversion on-line technology. A product from Riello company is used as power converter of the system and provides 3 phases 4 wire power with 0.9 power factor and less than 5% voltage THD. It is possible to parallel such these systems and extend the capacity to 320kVA.

It is possible to control and monitor the operation of the system remotely using internet connection.

As the figure 4 illustrates, BEST is able to control its own voltage and frequency and create a micro or islanded grid (island). When the local loads are disconnected from the utility, BEST will support the local grid with minimum disturbances. After restoration, BEST can re-synchronize the island with the grid and allow seamless reconnection to the grid.

In case of grid supply failure, the system is set to operate in the island mode, where BEST is disconnected from the main grid but continues to supply local loads. When the grid restores, BEST can re-synchronize the islanded network with the grid allowing seamless transfer back to the grid connected operation. Operating faults are recorded as well.

In charging mode, the rectifier is powered from the mains and converts AC power into a stabilized DC power for charging and automatic trickle charging of the connected batteries. Batteries are charged in accordance with a CVCC curve and the process is electronically controlled and monitored. This method prevents overcharging and also ensures that the batteries are charged in the shortest possible time. On the other hand, the inverter converts this secured DC power into a stabilized sinusoidal AC power and supplies the connected loads.

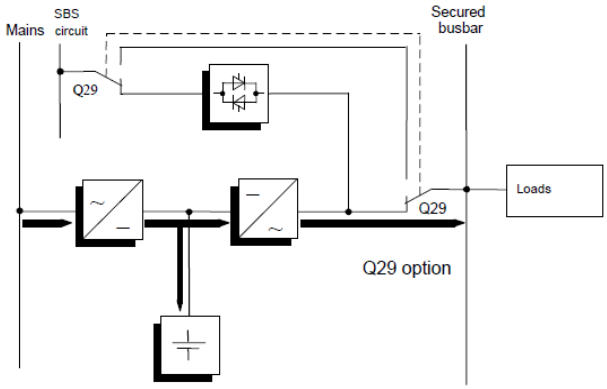

Figure 4. Schematic of power conversion system

CONCLUSION

BEST is designed to replace diesel generator and act as a mobile generation unit and eliminate diesel generator disadvantages. It is completely silent, Eco-Friendly, low maintenance, safe and easy to use.

It has the ability to provide 40 kVA power for one hour and can be easily (only by adding the number of batteries) extended to 3 hours.

It is about 2 years that BEST is utilized in MEEDC and has done more than 50 missions and prevents planned outage. It is also used as a mobile back-up power for critical load in ceremonies and events like new year

REFERENCES

[1] J. Antikainen, S. Repo, P. Verho, P. Jrventausta, 2009, "Possibilities to improve reliability of distribution network by intended Island operation", Int. J. Innov. Energy Syst. Power, vol. 4, no. 1.

[2] Xing Luo, Jihong Wang, Mark Dooner, Jonathan Clarke, Overview of current development in electrical energy storage technologies and the application potential in power system operation, Applied Energy, Volume 137, 1 January 2015, Pages 511-536, ISSN 0306-2619.

[3] H. Chen, T.N. Cong, W. Yang, C. Tan, Y. Li, Y. Ding, "Progress in electrical energy storage system: a critical review" Prog Nat Sci, 19 (2009), pp. 291-312.

[4] Status of electrical energy storage systems. Dti report. DG/DTI/00050/00/00, urn no. 04/1878. UK Department of Trade and Industry; 2004. p. 1–24.