THE DESIGN AND APPLICATION OF POWER QUALITY MONITORING SYSTEM FOR THE SMART SUBSTATION BASED ON IEC 61850

Ling LUO, Shengze CHEN
State Grid Shanghai EPRI – China
luol, chenshengze@sh.sgcc.com.cn

Yucan YANG, Siyuan YUAN
State Grid SMEPC – China
yangyc, yuansiyuan@sh.sgcc.com.cn

Hao LUO
Hunan University
luohao33@hnu.edu.cn

Yebin HU
XJ Elctric, SGCC
huyebin1976@qq.com

ABSTRACT

Along with enhancement of electrical techniques, power quality has become an important issue for both power utilities and users, leading to growing popularity of power quality monitoring systems. Previously, these systems are implemented in the traditional substations. As the smart substation based on IEC 61850 gradually becomes the major technical choice recently, the combination between smart substation and power quality is focused on by the industry. However, there is no smart substation successfully implemented with a high-resolution power quality monitoring system at present, caused by the low sampling rate designed for protection and control components. This paper proposes a design for both power quality monitoring devices and systems for smart substation technique with high sampling rate of 12.8 kHz. Fully satisfying the power quality monitoring requirement, the system provides a robust and reliable approach to communicate with the process-level network in the substation without generating the possible data congestion. Our method is applied in the first new generation of smart substation in Shanghai, which is proved to operate well. Furthermore, our proposed system is connected to Chinese largest urban power quality monitoring system by transmitting both power quality data and substation operation data for enhanced analysis.

INTRODUCTION

Since the smart grid technology is widely accepted, major power utilities in China, such as State Grid Corporation of China (SGCC), are now focusing on the technology of smart substation. Along with the rapid growth of the application of IEC 61850 standard [1], the new generation of smart substation becomes the main choice of power grid construction at present [2-4]. Besides, the ratio of non-linear loads is gradually increasing as well as the growth of economy, leading to the serious problem of power quality. Therefore, it is significantly necessary for power utilities to enhance the power quality monitoring for the sake of safe operation and service quality. Following this demand, power quality monitoring for the newly built smart substations are urgently needed.

However, the sampling rate of merging units in a smart substation is limited to 4kHz for protection and control components, according to the IEC 61850 standard, which cannot fully meet the requirement of high-order harmonic analysis in theory. Hence, the high-resolution power quality monitoring is not supported by current smart substations. On the other hand, the current process-level network of smart substations is not designed for massive data, and thus the rush of power quality data might cause the network paralysis in the substation, threatening the power grid safety. All of these above lead to the need of industry for a new power quality technique in smart substations. Although some research work explores the modeling, recording and implementation of power quality monitoring devices for IEC 61850 standard [5-7], there is limited research focusing on the design and application of power quality monitoring system for a real smart substation based on IEC 61850.

This paper proposes a novel power quality monitoring system in an IEC 61850 based smart substation by choosing merging units with high sampling rate. The system is designed upon a process-level network by setting virtual LAN (VLAN) for specific switches in order to transfer massive power quality data. Additionally, the Generic Object Oriented Substation Event (GOOSE) data are successfully accessed to the wide-area power quality monitoring system with our proposed method. In this way, the profound analysis of some complicated power quality problems, such as harmonic tracing, is able to be processed by combining the long-term monitoring data with the current substation operation status in the GOOSE data.

POWER QUALITY MONITORING DEVICES AND SMART SUBSTATIONS

Power Quality Monitoring Device

We have developed a novel power quality monitoring device (PQMD), shown in Figure 1, which can fully meet the functional requirements of smart substations. This device follows Chinese technical specifications of power quality, includes Q/GDW 650-2011 (Technical Specification of Power Quality Monitoring Device) and GB/T 19862-2005 standard (General Requirements for Monitoring Equipment of Power Quality). This device is able to support digitized samples input, of which the sampling rates include 4kHz and 12.8kHz. Based on the centralized design, this device can monitor multiple points simultaneous as well as parameters such as voltage deviation, frequency deviation, three-phase voltage imbalance, harmonics, flicker, voltage sags, swells and short interruptions.

Fig.1 Power quality monitoring device for smart substations

At present, different power quality monitoring systems collect data through different methods, including quality measurement devices, simulation programs and fault recorders. However, the communication, control and analysis approaches of these systems are also distinct, leading to the incompatibility issue. In order to allow the data from different monitoring devices and simulation systems to different database, we choose the standard data exchange format, PQDIF, to generate, following IEEE 1159 standard [8]. Data in format of PQDIF are composited by a group of logically related top records, including container, data source, monitor setting and observation. Power quality data which are mapped to logic layer of PQDIF are described by XML format file [9]. By simultaneously gathering the monitoring data from multiple points in one smart substation, our proposed PQMD is able to periodically form a PQDIF file to transmit.

Smart Substation

As the first new generation of smart substation in Shanghai, 110kV YeTang substation is the power supply of the Metro Line #5, the power quality monitoring is significantly important due to the possible harmonic pollution from the non-linear rectifiers used in subway system. Furthermore, this substation is located to the FengXian converter substation, which is the receiving end of Xiang-Shang ±800kV high voltage direct current (HVDC) project. The rated transmission power of this project is 6400MW, and the (400+400)kV bus connection scheme at the converter side is applied[10]. Thus, each pole adopts both high and low stages which are connected with two groups of *12*-pulse converters in series. As the *N*-pulse converter generates the $Nk\pm1$th (k is an integer) order of harmonic, the *12*-pulse converter will certainly generate 11, 13, 23, 25-th order of harmonic, affecting the power quality status of the neighborhood area. Hence, there is a down-to-earth need for a real-time power quality monitoring in the 110kV YeTang smart substation to check the power quality status and evaluate the harmonic pollution in the long run.

DESIGN OF A POWER QUALITY MONITORING SYSTEM FOR THE SMART SUBSTAION

Front-end Side

At the front-end side, several newly developed PQMDs are installed in the smart substation and connected by the process-layer network. Since the demands of protection and control components and PQMDs are different regarding the sampling rates and reading parameters. The design of power quality monitoring system needs to be customized for the specific targets of various PQMDs. Take the system of 110kV YeTang smart substation as an example. According to the bus connection scheme of YeTang substation, #1 and #2 main transformers are the core devices which need to be monitored in terms of power quality monitoring, as shown in the Figure 2.

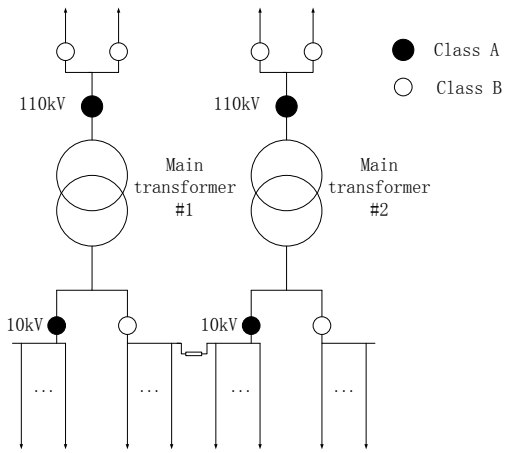

Fig.2 Power quality monitoring system for the YeTang substation

We have installed 10 power quality monitoring devices in the YeTang substation, following the discipline that the incoming buses and both sides of main transformers are monitored. Those devices installed at the high voltage (110kV) side of the transformer, which can simultaneously monitor the voltage and current, are defined as Class A. On the other hand, those installed at the incoming buses which only monitor the current are defined as Class B. Furthermore, the two branches of the low voltage (10kV) side of transformers are equipped with both power quality monitoring devices of Class A and Class B, respectively. For 10kV buses, electronic transformer can only measure the current in practice, while the voltage is measured via conventional transformers through merging units.

Back-end Side

At the back-end side, the power quality monitoring system needs to transmit the PQDIF files locally generated at the substation to the master station of the wide-area monitoring system, such as SGPQMS. The communication topology is shown in Figure 3. The monitoring host computer is placed at the smart

substation, linked to a private output interface in the communication cabinet. The power quality monitoring system inside the substation is able to collect the power quality data and generate PQDIF files. These files are then transmitted to the front-end computers at the master station of the wide-area monitoring system via TCP/IP and SFTP protocol in MIS network through firewalls.

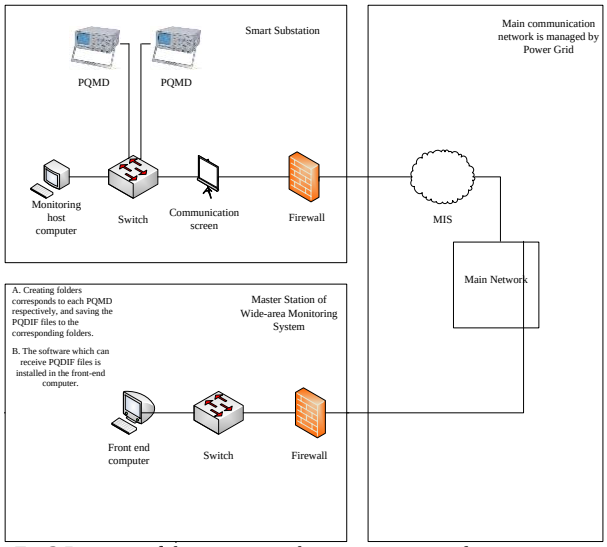

Fig.3 Diagram of the connection between power quality monitoring system and the wide-area monitoring system

APPLICATION OF POWER QUALITY MONITORING SYSTEM FOR THE SMART SUBSTATION

Our proposed power quality monitoring system is applied in the 110kV YeTang substation. Other than the bay-level and station-level, the main implementation of our system lies in the process-level network, which is described as below.

Sampled Measured Values (SMV) Network

Although a specific sampling rate of power quality monitoring in 12.8kHz is defined by IEC 61850, there is no PQMD actually applying 12.8kHz sampling rate installed in China so far. The main reason is that major local merging units are not available for 12.8kHz sampling rate. In the YeTang substation, the independent process-level network is applied based on the merging units of 256-point-per-cycle as well as 100Mbit/s Ethernet. According to the Appendix B of IEC 61850-9-1 [1], the sampling rate is computed as:

$$N_{mu} = \frac{V_{DR}}{50 L_{TL} F_{SR}} \tag{1}$$

, where N_{mu} denotes the amount of measuring units; V_{DR} denotes the speed of Ethernet; L_{TL} denotes the maximum length of message; F_{SR} means the frequency of sampling. According to [11], L_{TL} = (26 bytes of frame information + 4 bytes of identifies priority + 8 bytes of PDU +2 bytes of ASN + 2 bytes of block number + 46 bytes of dataset + 23 bytes of status)*8+96 byte of vacancy packets = 986.

Thus, the maximum number of merging units in our scenario is computed as:

$$N_{mu} = \frac{100 \times 10^6}{50 \times 984 \times 256} = 7.93 \tag{2}$$

Since 8 monitoring bays and 12 merging units are required for the YeTang substation, the transmission speed of Ethernet should reach 1000Mbit/s. Therefore, the design of this independent, real-time and robust process-level network is the key issue of implementing. Because the huge amount of SV data generated by devices connected to the process-level network, such as merging units, intelligent interfaces and IED equipment, cause significant network latency, prioritized VLAN is chosen in our project to isolate irrelevant equipment, hence avoiding process-level network congestion. The SV and GOOSE data are then divided into different VLAN by bays and functions.

PQMDs are required to bind the VLAN-ID of all monitoring bays to the gigabit optical ports of the corresponding switches respectively. The data are transmitted through the optical port of process-level plug-in interface (NPI) in the PQMDs to CPU via internal Ethernet protocol. The raw data are then calculated in terms of power quality indices. Finally, the control signal is transmitted to the station-level network through the plug-in communication to drive the over-limit alarm. The process diagram is shown in Figure 4.

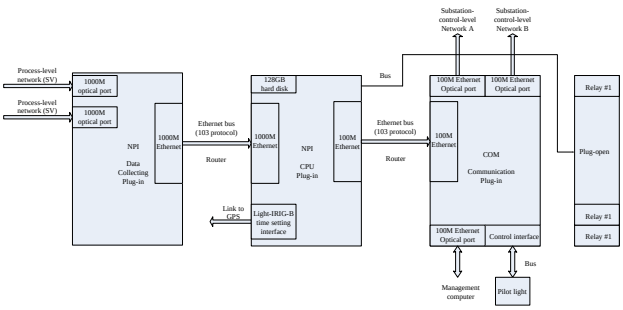

Fig.4 Diagram of PQMD in the SMV network of YeTang substation

110kV Side

At the 110kV side, the sampling rate of one of two sensors in the corresponding electronic transformer is set to 12.8kHz. On the other hand, and device supports re-sampling from the 12.8kHz data into 4kHz output data, which can provide a backup scheme to transmit data of low sampling rate to protection and control devices. The additional merging unit (each monitoring point corresponds to a merged unit) is used to receive the data of 12.8kHz sampling rate from the sensor, followed by synchronization and output to the dedicated process-level network for power quality monitoring. All the data from the merging units for 12.8kHz sampling rate are accessed

to an additional switch for the process-level network, shown in Figure 5.

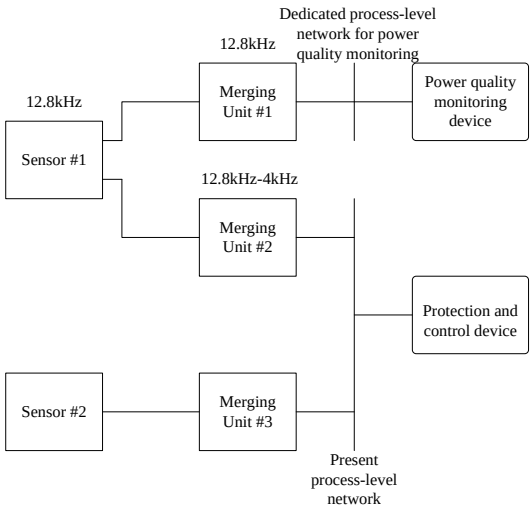

Fig.5 Process-level network at 110kV side

10kV Side

The design of the process-level network for current data at the 10kV side is exactly the same as the 110kV side. The design of the process-level network for voltage data at the 10kV side is more complex. Two merging units based on traditional sampling rate are applied to the main transformers respectively to collect the voltage data on two branches of 10kV bus, shown in Figure 6.

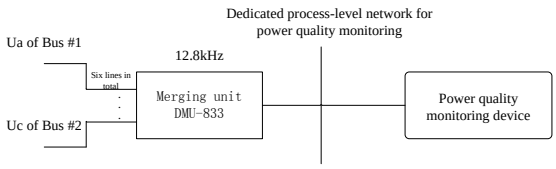

Fig.6 Process-level network at 10kV side

GOOSE Data Access

According to the different measuring points and bays, PQMDs are given position information of 16 groups breakers separately, including all the 110kV bays and buses, all branches connected to the main transformers, and all the 10kV bays, segment buses, substation transformers and capacitors. All of this information is transferred in GOOSE data. As the operation information of substation is collected, some enhanced analysis can be achieved regarding power quality. For example, the voltage fluctuation depending on the reactive power in power flow can be calculated. The GOOSE data are accessible to PQMDs through the process-level network so that the substation operation status can be combined with the data collected by PQMDs to analyze, which is significant important to solve some complex power quality problems. For instance, harmonic tracing problems can be then realized by the real-time position information of sectionalized buses and breakers.

CONCLUSIONS

This paper introduces a design of power quality monitoring devices and systems for smart substations based on IEC 61850. The proposed system is applied in the first new generation of smart substation in Shanghai-110kV YeTang substation. The real operation results show that the implementation of our system into the smart substation is reliable and robust by avoiding congestion in data communication. In addition, this system is connected to a wide-area power quality monitoring system via transmitting the PQDIF and GOOSE file generated at local substation, which is helpful for globally power quality analysis.

REFERENCES

[1] IEC 61850: Communication Networks and Systems in Substations.

[2] L. Wang, et. al. 2008. “Research and application of digital substations based on IEC 61850,” *Power System Protection and Control*, 36(24), 90-100.

[3] Y. Ju. 2010. “Modes of web communication of digital substaion,” *Power System Protection and Control*, 38(1), 92-95.

[4] L. Zhou, et. al. 2012. “Development of photovoltaic grid-connected system with power quality regulatory function,” *Power System Protection and Control*, 40(9), 137-145.

[5] B. Yunus and H. Li, 2006. “Analysis of Power Quality Waveform for Data Transmission Efficiency over IEC 61850 Communication Standard,” *IEEE PECon*, 161-166.

[6] J. Xin, 2007. “Building Power Quality Monitoring System Using Model Driven Architecture and IEC 61850,” *IEEE ICIEA*, 422-425.

[7] A. Apostolov, 2009. “Impact of IEC 61850 on power quality monitoring and recording,”*CIRED Electricity Distribution – Part 1*, 1-4.

[8] IEEE 519 – 1992: IEEE Recommended Practices and Requirements for Harmonic Control in Electrical Power Systems.

[9] L. Luo et. al, 2013. “A cognitive communication based wide-area monitoring system of smart grid,” *Multiagent and Grid Systems*, 9(4):335-350

[10] Y. Liao, et. al. 2014. “Flashover tests on air gap of ±800kV DC transmission line under composite DC and switching impulse voltage,” *IEEE Trans. On Dielectrics and Electrical Insulation*, 21(5):2095-2101.

[11] Y. Yi, et. al. 2010. “Process level application scheme in smart substation,” *Power System Protection and Control*, 38(21), 1-5.