ADVANCEMENT IN STATE GRASPING METHOD OF MV DISTRIBUTION NETWORK FOR SHORT-TERM AND MID-TERM PLANNING

Hiroyuki ISHIKAWA
Chubu Electric Power Co., Inc. – Japan
Ishikawa.Hiroyuki@chuden.co.jp

Takukan YAMADA
Chubu Electric Power Co., Inc. – Japan
Yamada.Takukan@chuden.co.jp

Kouji SADA
Chubu Electric Power Co., Inc. – Japan
Sada.Kouji@chuden.co.jp

Tomihiro TAKANO
Mitsubishi Electric Corp. – Japan
Takano.Tomihiro@df.MitsubishiElectric.co.jp

Nobuhiko ITAYA
Mitsubishi Electric Corp. – Japan
Itaya.Nobuhiko@ct.MitsubishiElectric.co.jp

Hideya OHTSU
Mitsubishi Electric Information Network Corp. – Japan
Ohtsu.Hideya@mind.co.jp

ABSTRACT

This paper describes the advancement in state grasping method of MV distribution networks. This is aimed to improve accuracy in grasping voltages and line currents of a MV distribution network with high penetration of renewable energy sources (RES), which is mostly photovoltaic generators (PV) in Japan.

Advancement in grasping method is crucial for distribution system operators (DSOs) in many ways: Controlling on-load tap changers (OLTC) according to the exactly-estimated voltages contributes for maintaining voltages into the restricted ranges with less number of OLTCs. Investment for distribution network can be optimized by making components fit in with the exactly-estimated line currents.

Proposed method will be realized by utilizing measured data from sensor-equipped automated switchgears and smart meters.

Verification was carried out through computational simulation. Accuracy of the estimation was confirmed to be high enough for applying to short-term and mid-term planning, which is generally derived from the results of power flow calculation based on the grasped network conditions.

INTRODUCTION

In Japan, peak demand of electricity consumption is starting to saturate due to the divergence in the lifestyle of electricity consumers, which includes introduction of highly efficient electric appliances and Energy Management Systems (EMSs). This trend may accelerate due to the continuing decline in population nationwide.

In this context, it is crucial to avoid excessive investment in distribution networks when replacing aged facilities and when connecting new loads or generators.

On the other hand, capacity of PV installed to the power grid has been growing rapidly since feed-in-tariff scheme for RES started in 2012 in Japan. Chubu Electric Power Company Inc. (CEPCO), which is one of the utilities located at the central area of Japan, has hosted as much as 5.8GW of PV already at the end of FY2015 [1].

Most of the PVs are installed to MV and LV distribution networks causing voltage rise, and for minimizing investment, it is important to manage these voltage rise with least number of regulators.

They will be realized by advancing short-term and mid-term planning based on detailed modelling of network conditions, which can only be started from grasping the actual state of them.

This paper describes how we are advancing state grasping method of MV distribution networks.

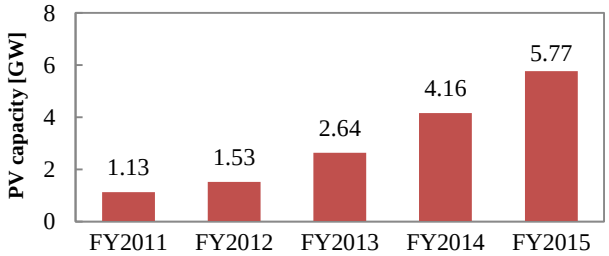

Figure 1: Hosted capacity of PV in CEPCO [1].

CONVENTIONAL METHOD OF STATE GRASPING

Methodology

Conventionally, estimation of the state of a MV distribution network; i.e. line current and network voltage, which is the basis of the modelling for network planning, starts with the measuring of single-phase line current at the feeder circuit breaker (FCB) of substation.

Secondly, the measured line current will be distributed to each nodes of the network according to their proportion of total contract capacities or peak demands.

Thirdly, line current are calculated by aggregating these node currents.

Power factor for calculating network voltage is also an estimated value derived through sampling research. They are assumed as constant value throughout the network.

After all, network voltage will be calculated from the line current, line impedance and the constant power factor.

Schematic diagram of the conventional method is shown in Figure 2.

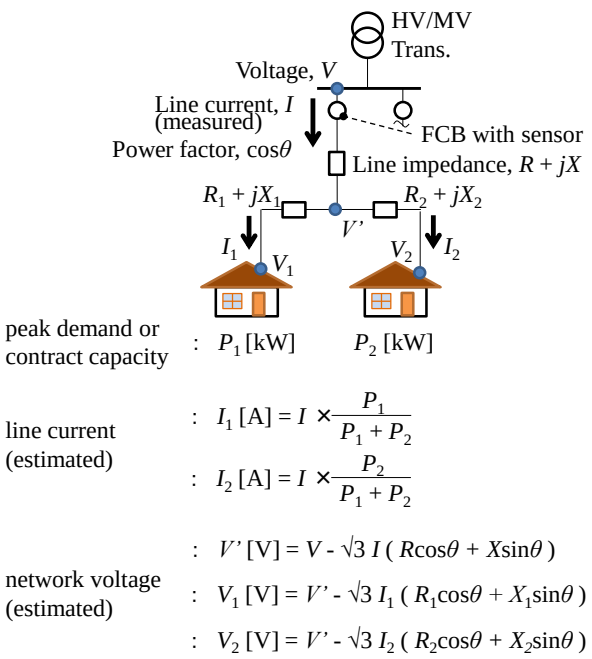

Figure 2: Schematic diagram of the conventional method. Single-line load current measured at the FCB is distributed to each nodes according to their peak demand or contract capacity. Voltage is calculated from constant power factor and line impedance.

Issues

Conventional method is available because loads with uniform characteristics are the major players in the distribution network. However, as the customers' lifestyles are diverging related to the high interest in environmental issues, it may become difficult to estimate the state of the network with the conventional method.

Additionally, reverse power flow from the vastly installed PVs make this more complicated, as the line current measured with the limited sensors mounted on the FCBs are mixture of power consumption of loads and generated power of PVs. They do not represent the actual electricity consumption nor the actual power generation, and so distributing them according to the contact capacities or peak demands of each nodes will result to an estimation that diverge much from true values.

Overall, state grasping of a distribution network is becoming more and more difficult and is necessary to be upgraded for the usage of detailed network planning.

PROPOSED METHOD

Basic Concept

There are some necessary specifications when upgrading the grasping method ;

Specification 1: Actual load and actual PV output of each node is necessary to be grasped individually.

As mentioned in the previous section, power flow (or line current) measured with the sensors mounted on FCBs cannot directly be utilized for plannning, as they are mixture of consumption and generation. It is necessary to split them into actual load and actual PV output, and to distribute them individually into each node of the network. This will be realized by appling sensors that can measure three-phase current, three-phase voltage and power factor to the exisiting automated switchgears. They are connected to the central systems by ad-hoc communication networks already, and so the measured data can easily be collected, transferred and stored at the central systems for utilization.

Specification 2: Avoid increase in the number of sensing equipment.

Automated switchgears are mounted on trunk lines, which means that their number is limited and is not enough for monitoring power flow of each branches in detail.

Their measurements are also a mixture of generation and consumption, and is necessary to be splitted as well.

These constraints may well be covered by increasing the number of sensors, though it is not acceptable for economic reasons.

Thus, smart meters are chosen as available sensors for filling the gap that the minimum number of sensors cannot measure.

Metered data are aggregated for splitting the measured power flow of trunk line into cosumption and generation, and also for distributing them individually into each nodes to monitor the condition of each branches.

In CEPCO, deployment of smart meter has started from FY2014, and finally will be finished at the end of FY2022 with more than 10 million smart meters. Active power of LV meters, active/reactive power of MV meters can be collected every 30 minutes and be utilized for various purposes.

Specification 3: Applicable with unknown connected phases for single-phase loads/PVs.

More than 1.5 million pole-mounted MV/LV transformers are installed to the MV distribution network, and none of their connected phases are managed in CEPCO.

In utilizing LV smart meters as sensors, it is necessary either to research and manage the connected phases of every pole-mounted transformers or to develop an available method of utilizing LV smart meter data without the information of MV/LV transformers' connected phases. We have chosen the later idea, for it takes much more effort to research and manage topology of 1.5 million pole-mounted transformers.

These specifications are to be satisfied by the following methodology in several steps.

Methodology

In order to meet the requirements of above specifications, following procedure is proposed. Schematic diagram of the proposed method is also shown on Figure 3.

Step 1:
First of all, output of net-metered PVs (P_{nPV}) are to be estimated as they cannot be metered directly by the smart meters.
In order to split the net-metered data into load consumption and PV output, modelling method "beyond the meters" is applied [2]. Modelling is realized by time-series metered data of neighboring individually-metered PVs (P_{iPV}), and P_{nPV} will be estimated from them.

Step 2:
Smart meter data of individually-metered PVs (P_{iPV}) and estimated output of net-metered PVs (P_{nPV}) are aggregated, added to the active power (P_T) of the trunk line measured with the sensors, for calculating actual active current of load consumption (I_{PL}) and active current of power generation (I_{PG}). Calculation is indicated as below, where I_{PT} stands for measured active current of the trunk line.

$$I_{PL} = I_{PT} \times \frac{P_T + (\sum P_{iPV} + \sum P_{nPV})}{P_T} \text{ [A]}$$

$$I_{PG} = I_{PT} - I_{PL} = -I_{PT} \times \frac{\sum P_{iPV} + \sum P_{nPV}}{P_T} \text{ [A]}$$

I_{PT}, I_{PG} and I_{PL} are average values of three-phase current, in order to meet the requirement of 'Specification 3.'

Step 3:
I_{PL} and I_{PG} is distributed to each node according to their power consumption ($P_{L,a}$) or their PV output ($P_{PV,a}$) calculated from the aggregated metered data.
Active current originated from loads of node a ($I_{PL,a}$) or from PVs of node a ($I_{PG,a}$) is calculated as follows;

$$I_{PL,a} = I_{PL} \times \frac{P_{L,a}}{P_T + (\sum P_{iPV} + \sum P_{nPV})} \text{ [A]}$$

$$I_{PG,a} = I_{PG} \times \frac{P_{PV,a}}{\sum P_{iPV} + \sum P_{nPV}} \text{ [A]}$$

Step 4:
Reactive current of node a originated from loads ($I_{QL,a}$) and PVs ($I_{QG,a}$) is also calculated from similar procedure as 'Step 1' through 'Step 3.'

Step 5:
Active and reactive line current can be calculated individually by aggregating node current derived from Step 3 and Step 4.
Finally, network voltage is calculated from active and reactive line current, by multiplying line impedances to them.

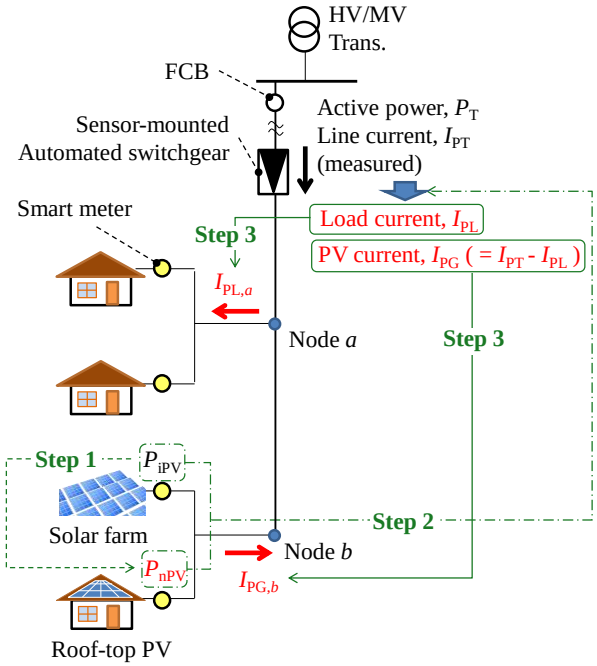

Figure 3: Schematic diagram of the proposed method. Three-phase line current and voltage, power factor is measured at the trunk line with switchgear. Smart meter data is combined with them for detailed monitoring of branch lines.

VERIFICATION

To verify the proposed method, computational simulation was carried out.

Simulation Model

Existing 6.6kV distribution line of CEPCO with certain characteristics was chosen and modelled; 1) Feeder with various kinds of loads, residential and non-residential to verify the influence of load characteristics. 2) Feeder with high rate of unbalance (>2% in voltage) to verify the influence of unbalance.
MV and LV loads of each nodes were modelled from sampled load curves of similar contract types and contract capacities.
PV was also modelled from sampled output patterns of actual roof-top PVs. However, the existing feeder has no PVs installed, so the nodes with residential customers were chosen for hosting additional PVs.
As the connected phases of each MV/LV pole-mounted transformers are unknown, their topologies were determined so that the simulated voltage unbalance fit the actual unbalance rate of the existing MV feeder.
Single line diagram of the simulation model is indicated on Figure 4.
As shown in Figure 4, node A and node B was chosen as the reference node for evaluating the simulated results. This was because they are the most difficult node to monitor line current or network voltage, with the lack of sensor-equipped switchgears.

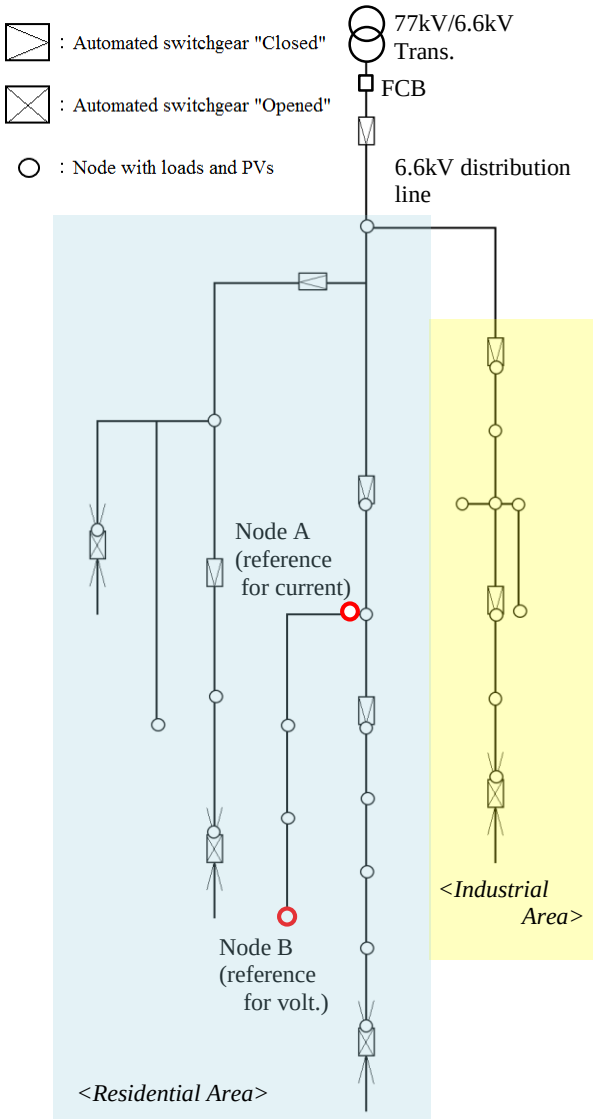

Figure 4: Single line diagram of the simulation model. This is based on the existing MV feeder of CEPCO. The most difficult node to monitor was chosen as the reference nodes.

Simulation Conditions

Simulation conditions are shown on Table 1.

Load was fixed to heavy load condition, and PV was simulated with various capacities.

Three-phase average values of the reference nodes of every 30 minutes were compared for evaluating the grasping method.

Figure 5 shows the line current of Node A. Peak load occurs around 19:30 - 20:30 for Case 1, when lighting demand of residential loads are high. For Case 2 with high penetration of PVs, line current starts to decline from 6:00 when PV starts generation and reaches peak in 12:00.

Figure 6 shows the voltage drop between Node B and FCB. Voltage drop reaches peak as with the line current. For Case 2, voltage rises in the day time, indicated as negative value in the figure.

Table 1: Simulated Conditions.

	Max. load	Hosted PV capacity
Case 1	3.5MW/ 1.3Mvar(lead)	0
Case 2		6.5MW (= 2/3 of residential loads with 4kW of PVs each)

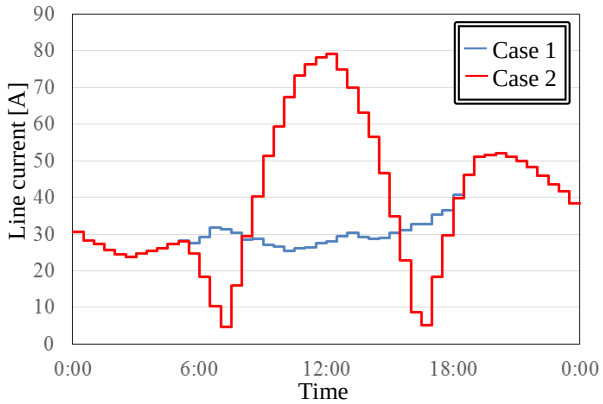

Figure 5: Three-phase average line current of every 30 minutes (Node A).

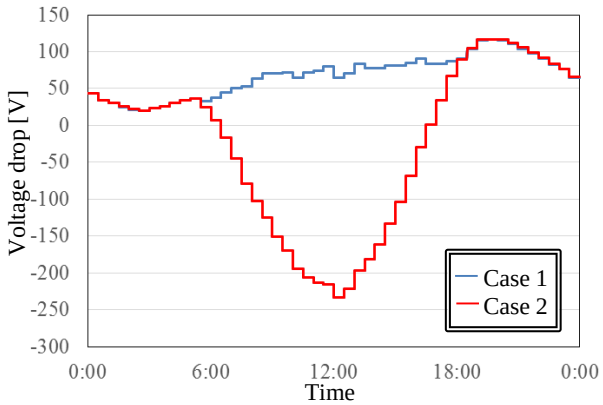

Figure 6: Three-phase average voltage drop from FCB of every 30 minutes (Node B).

Results and Discussions

a) Estimation with Conventional method

Estimated result is shown in Figure 7 and Figure 8.

Line current estimated with the conventional method fit well with the actual state for Case 1. Voltage drop is overestimated biasedly, due to misestimation of power factor as 95% (lagged), which is almost 100% in actual state.

Estimation diverges much for line current and for network voltage when a large amount of PVs are hosted in Case 2. This is because the measured line current at the automated switchgear diverges from the actual power consumption, and also their distribution diverge as they are calculated according to the contract capacities.

This misestimation may cause unexpected violation of thermal capacity or restricted voltages if short-term and mid-term planning was carried out based on the network condition estimated with the conventional method.

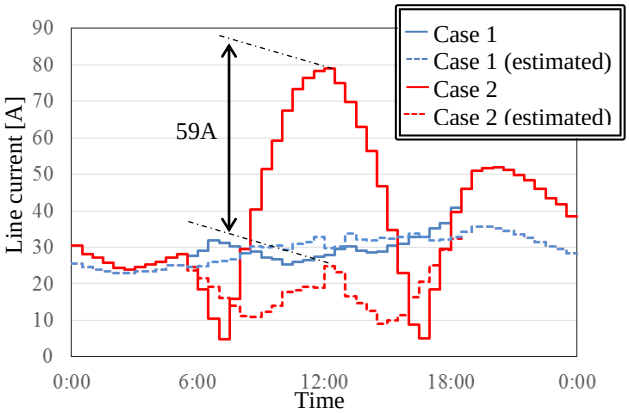

Figure 7: Line current of Node A estimated with conventional method.

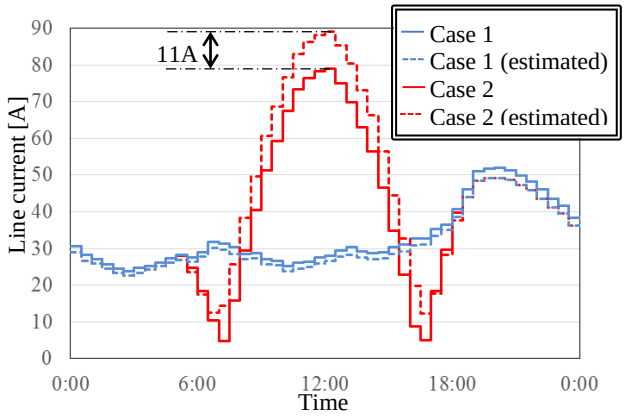

Figure 9: Line current of Node A estimated with proposed method.

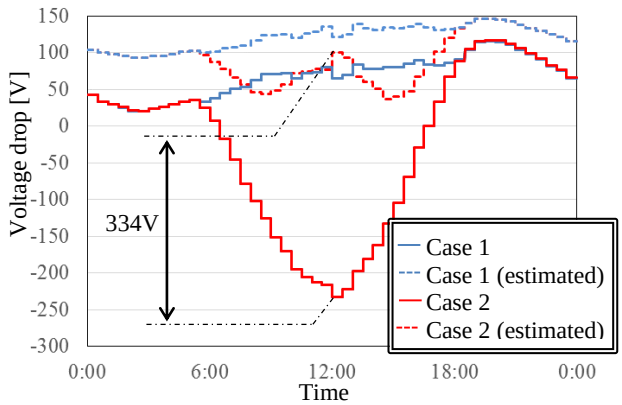

Figure 8: Voltage drop from FCB at Node B estimated with Conventional method.

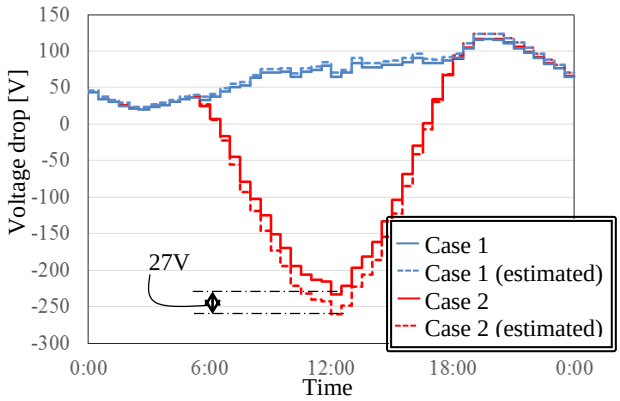

Figure 10: Voltage drop from FCB at Node B estimated with proposed method.

b) Estimation with Proposed method

Estimated result is shown in Figure 9 and Figure 10.

By applying proposed method, estimation error of line current and network voltage declined to absolute error of 11[A] and 27[V] in maximum respectively for Case 2.

These errors occur due to the unbalances in current and voltage, which is much lower than the simulated conditions for the majority of feeders in CEPCO. Thus, it is assumed that grasping errors appears to be much lower when applied in the real field, and is accurate enough for the practical usages.

CONCLUSIONS

This paper proposes a new method of grasping conditions of MV distribution network with various loads and large hosted capacities of PVs.

Conventional state grasping method has some assumptions; passive loads with constant power factor are the only players in the network, which have been changing due to the divergence in lifestyles of customers and also by the hosted DER. These changes make it difficult to monitor the network conditions with the conventional method, and their advancement is inevitable.

Advancement in state grasping is realized through replacing the automated switchgears to sensor-equipped ones, and also combining metered data from smart meters. First of all, measured line current will be adjusted by metered data of PVs so that the actual load can be derived. Actual load current will then be distributed to each node of the network according to their aggregated smart meter data. Actual PV current will be distributed to each PV nodes according to their smart meter data as well.

Finally, these node currents will be aggregated to obtain line current, and to calculate network voltage.

Verification was carried out by computational simulation. Simulated results indicated that the proposed method can be applied for monitoring the network conditions with high accuracy.

CEPCO is now developing related system of proposed method to advance the short-term and mid-term planning, which is planned to be completed in the end of FY2021.

REFERENCES

[1] Chubu Electric Power Company Inc., 2016, *Chubu Electric Power Company Group Annual Report 2016*, 39

[2] T. Yamada, 2016, "Utilization of smart meter data in modelling of PV output", *Proceedings of CIGRE SESSION 2016*, C6 contributions, PS2, Q2.5