DEALING WITH IN-FIELD REPAIR TASKS OF LARGE POWER TRANSFORMERS

José Luis MARTINEZ
Edenor - Argentina
jmartinez@edenor.com

ABSTRACT

The development of electricity distribution networks is influenced by a number of technical and regulatory facts that link distribution utilities incomes to network availability, affecting so the development of the business. Companies operating in such an environment therefore regard power transformers as critical physical and capital-intensive assets. They play a strategic role in the distribution networks due to the huge overall investment made in the capital, operational and maintenance costs along their operational lifespan.

In this paper, the alternatives arisen from an in-field repair performed on a critical large power transformer are outlined. Stages such as the evaluation of failure and feasibility of repairing analysis are described, as well as alternatives appeared during the execution of tasks and verification tests performed are developed.

Among others, verification tests carried out on the transformer after the repairs are emphasized, because of the particular characteristics of their execution. This included an overvoltage test, energizing the unit using the own HV installations of the station. In the developed experience, it is highlighted how the suitable evaluation of the arising situation, made it possible to successfully deal with the challenge of a large scale intervention in field, changing to do that, some paradigms related to the "right" required conditions to deal with major actions on large power transformers.

INTRODUCTION

At present, electricity distribution is influenced by a number of facts that affects the development of the business: increasing demand of networks, lower redundancy of systems, operating restrictions that limit maintenance outages, incomes tied to the availability of the installations and so on, together with the demand of strict technical requirements and the imposition of severe penalties for its non-accomplishment.

This situation drives distribution utilities to optimize the maintenance management of their physical assets, aiming at developing their activities more effectively, so as to fulfil the imposed requirements in a cost-effective way.

In this framework, power transformers represent a critical physical asset for distribution utilities for their strategic role to ensure the operation of the distribution systems and the costs involved, not only in their purchase but also in their maintenance and operation during their lifespan.

Edenor is the largest argentine electricity distribution company in terms of number of customers and energy sold. It operates a HV network with 78 transformer stations HV/HV, HV/HV/MV and HV/MV, with a fleet of more than 200 HV power transformers, 15,839 MVA of HV/HV, HV/HV/MV and HV/MV transformation power and voltage levels that range from 132 to 500 kV.

The transformers population presents an average age of 25 years, with limits ranging from 1 to 50 years. Their failure index is quite low, with a mean lower than 2% per year (involving major failures that require replacing the unit or the need of major repairs in field).

It is so that the use of the best maintenance practices then, becomes crucial in order to increase the availability and reliability of such power transformer fleet [1, 2] and, in case of failure, take the right decisions to restore the electric power supply as soon as possible.

MAJOR IN-FIELD REPAIR TASKS

A wide variety of modern components and control devices are now available in market, to make the monitoring, control and analysis of the transformers condition easier, for a better proactive maintenance of such assets [2, 3]. These resources, supported by the new technologies existing, also contribute to improve the Asset Management program of any power transformer fleet.

Anyway, in the present context, when a major failure on a large power transformer occurs, the challenge for distribution utilities is being prepared to cope with that kind of situations, to solve them both, fast and at the same time, in a reliable way. This issue leads maintenance staff to face difficult decisions involving restoration times and repair costs.

Therefore, when possible, the execution of on-site repairs enables a power transformer to be put into service much earlier than off-site repairs. In addition, on-site repair costs and time involved are considerably lower than a repair in factory.

This fact imposes performing a thorough and realistic condition assessment of the affected transformer, following a systemic and ordered approach of the problem, for a more comprehensive evaluation process. The exposed situation requires counting on pre-established contingency plans to successfully face such events in a planned and organized way.

In this paper, the experience of an in-field repair performed on a critical in network large power transformer is developed, considering the particular context of its execution and the characteristics of the tasks developed, as well as the results obtained and the

expertise acquired from its execution.

EVENT OF STUDY

As a consequence of an internal discharge in a bushing of a 220/132kV, 300MVA power transformer, its outage was produced. Such event caused a number of damages of magnitude on the unit, including destruction of several 220 and 132 bushings, affectation of internal CTs and accessories and deformation of main and auxiliary tanks, seriously damaging the transformer condition as a whole. At the time of the event, the company did not have a similar spare unit.

HV Transformer Station

The involved station represents a key node in the Edenor HV network, to transmit the generation from the thermal power stations of the city of Buenos Aires and surrounding area, being linked to other main stations by a 220kV transmission cable (Fig. 1).

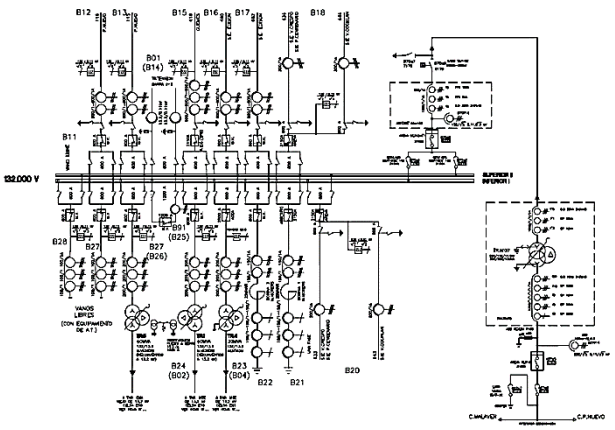

Fig. 1 - Single-line scheme of the HV transformer station

At the station, a 220/132 kV, 300MVA transformer feeds a 132kV double bus-bar, which energizes 4 132/13,86 kV, 40MVA power transformers and 10 132kV feeder bays.

HV Power Transformer

Fig. 2 - 300.000 kVA, 3-phase power transformer

3-phase power transformer, core type (Fig. 2)

Rated Power: 300.000 kVA ONAN - ONAF
Voltage Ratio: 220.000 ± 6x2% / 132.000 V with OLTC
Vector Group: YNyn0, YNd5
Oil Volume: 78.000 litres
Main Tank: bell type
Untanking Lifting Weight: 45.000 kg
Manufacturing Year: 1977

Evaluation of the Failure

Just after the failure, an evaluation of the damages produced was carried out by transformer specialists of the company.

At first sight, movement of insulators in primary and secondary bushings, breakage of 220kV neutral insulator, axial movement of auxiliary tank, breakage of relay Buchholz, detachment of a pocket CT terminal box, operation of overpressure valve and spill of about 10.000 litres of oil were detected.

Since in the existing situation, no similar spare transformer was available, two alternatives arose and were carefully evaluated: performing of the repair in a factory or execution of required restorations in field.

To define this, a plan to assess the true condition of the unit and the feasibility of performing a repair in field was outlined. The development of each stage established was subjected to the results of the previous one. As first steps, the following determinations were executed:

- Electrical LV routine test results were satisfactory.
- DGA showed electrical discharges of high energy. No signs of affectation of solid insulation were identified.

Such results led to the next step, the entry of specialists into the transformer for a visual inspection, to obtain a more detailed evaluation of damages.

During the internal inspection, flashovers of the end-field of a 220kV bushing against the wall of the tank and an internal CT were identified, pieces of porcelain spread in an area all around the involved column, insulation shields broken and loosening of press-board clamping pieces. No movement of the windings was detected.

As a result of the inspection, having verified that no significant damages were present and the failure had not moved nor deformed the windings, it was confirmed the feasibility to face the repair of the unit in field, challenging to do that, some existing paradigms and preconceptions for such type of tasks. The time lag for the complete execution of the planned tasks was estimated in about four weeks.

Even though dealing with a repair in field, diverging from the usual practices for such kind of units, could represent some risks (contamination, moisturing of cellulose), some benefits were considerable. Time required could be significantly reduced, as well as the need of transportation to a factory and costs involved, besides the unavailability time of the transformer.

In the decision-making process, cares to be taken concerning prevention of moisturing of the cellulosic insulation were carefully taken into account. Since most of the repair activities were going to be performed with the unit un-tanked, lifting the bell tank, and considering the voltage levels involved, cares to minimize the exposition of the windings to the atmosphere, included protecting the active part in a controlled atmosphere, with heated environment and continuous injection of dried air during the whole time of the developed tasks.

DEVELOPMENT OF THE REPAIR

Facing the repair required the displacement of the unit from its emplacement to a free area nearby, to make the lifting of the bell possible by means of suitable cranes and finally, untanking the active part (Fig. 3).

Fig. 3 - Lifting the 300.000 kVA, 3-phase power transformer

Tasks Executed

Once the bell was lifted and the active part completely exposed, it could be verified that the damages produced were neither, higher nor different than the expected through the measuring and the internal inspection previously executed, confirming so, the feasibility of performing an in-field repair (Fig. 4).

Fig. 4 - Execution of tasks under controlled conditions

The planned tasks included the following steps:

- Cleaning away residues, rests of carbon and burnt paper product of the discharge and pieces of broken porcelain, spread all around the affected column.
- General repairs, replacement of damaged insulating barriers and broken clamping pieces, re-insulating of leads, re-clamping of windings, etc.
- Drying out of windings by hot oil spray.
- Displacement to the base and final assembly.
- Electrical verifications.

After finishing the treatment, its result was verified by the measuring of dew point, so as to estimate the level of moisture in the cellulosic insulation. Results were satisfactory and have remained stable so far.

The opportunity was also taken to introduce some improvements to the unit, such as incorporation of a second over-pressure device and a rapid rise pressure relay as additional protections. New HV bushing of up-to-date design were also adapted in replacement of the original ones.

In-field Verification Tests

Once the task repairs were concluded, routine tests were conducted, obtaining satisfactory results. Anyway, these verifications were not enough to confirm the results of the repair, given the scale of the tasks executed. Consequently, to verify the dielectric condition of the windings as a whole, the need of performing an over-voltage test was defined.

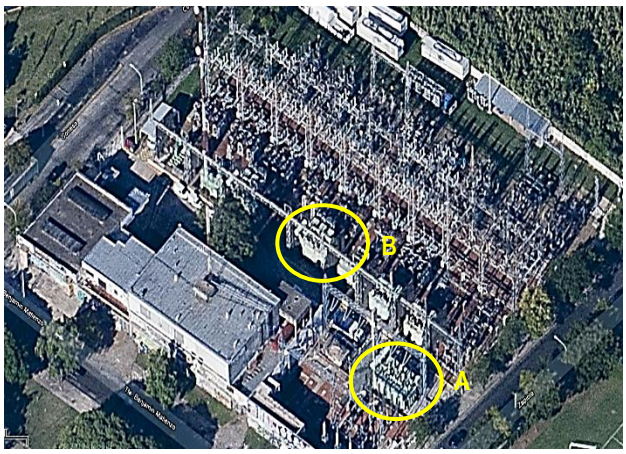

Fig. 5 - Aerial view of the station. "A" transformer under test and "B" feeder transformer for the overvoltage test.

Although in such type of transformers the induced over-voltage withstand test is normally performed energizing the unit from its MV tertiary winding, in this case being this winding just an internal compensation tertiary, without external terminals, another alternative was required.

From this limitation, it was decided to utilize the own structure of the transformer station to feed the unit to be tested by means of a 132/13,8kV, 40 MVA power transformer belonging to the station fleet. This required using one of the 132kV bus-bars of the station as part of

the feeder circuit.

Such issue imposed re-configuring the HV bus-bars system in a particular way, so as to reach the circuital, technical and safety characteristics required, *what represented a highlight of the repair executed* (Fig. 5).

Since the transformer under test was a relatively aging unit, a voltage level 5% higher than the rated voltage was applied, in order not to over-stress its insulation system, extending its duration for 1 hour. So, the 132kV winding was energized from the HV/MV feeder transformer and voltage regulation was performed from its OLTC.

Voltage values reached were registered from the measuring PT and current monitoring obtained directly from the protection relays of the station. DGA of the transformer oil was performed during the whole duration of the test and up to 24 hours later, to consider probable diffusion time of gasses in oil produced in case of an internal failure. All these verifications showed satisfactory results and they remain stable up to now.

USE OF IN-HOUSE KNOWLEDGE

A key factor for the success of this challenge was counting on the expert knowledge of specialists in this matter, as well as highly qualified work force.

Therefore, it is essential to have in-house all the required expertise concerning the key developed activities, as strategic core skills [2]. This includes a broad experience and up-dated knowledge of the state-of-the-art in transformers design, operating, maintenance practices and tests, to support the evaluation of results and the decisions to take.

On the other hand, a strong emphasis must be placed on the training of specialized in-house working teams. Periodically recycling and updating their knowledge and skills, as well as introducing them in the use of the new technologies in force, to make an expert use of them, the best maintenance practices are highlighted [1, 2].

In this regard, as part of the tasks carried out, the operational coordination of different working teams in charge of diverse tasks must be outlined, with a huge deployment of human and material resources. This fact represented a central issue for the achievement of the proposed goal.

RESULTS OBTAINED

The observance of pre-established evaluation procedures led to determine type and location of fault involved, range of repairs required to restore the damaged unit and along with this, define the feasibility of its on-site repair.

In about 30 days, the repair of the transformer could be executed, reaching optimum results related to the complete restoration of the unit; which included also the up-grade of protecting devices and key components. Consequently, time and repair costs were significantly reduced in relation to those required in a repair in a factory.

All that, performed with in-house maintenance personnel, and the interaction of several and diverse actors depending on each other, which represented a key factor to optimize and align their activities in a proactive way.

LESSONS LEARNED

It is possible to repair EHV power transformers by means of large-scale interventions in field. To do so, it is necessary to overcome some paradigms regarding conditions required to face tasks of such magnitude.

The use of defined evaluation procedures, following pre-established systematic protocols of action, assures reliability in the obtained results that makes the decision making process easier.

Having critical spare parts (i.e. HV bushings and other key components) available in advance, assures to face with a greater likelihood of success events of this importance.

Finally, many times it is possible to verify in-field the effectiveness of the tasks executed, performing most of factory verifications, turning if required, to the own installations and equipment available in the involved transformer station.

CONCLUSIONS

Nowadays, electricity distribution utilities deal with the challenge of achieving high levels of availability and reliability of their physical assets. In such a context, power transformers represent critical assets for their strategic role in networks.

This situation imposes not only using suitable proactive maintenance practices, but also counting on pre-established procedures to follow in case of major failures, when large-scale corrective maintenance actions are required, in order to increase the possibilities of reaching success when facing with such issues.

In this way, when possible, the execution of in-field repairs following defined evaluation procedures for a more comprehensive approach to the problem, makes it possible to achieve optimal results, concerning to recover the normal performance conditions of the affected unit.

Last but not least, to reach the exposed results, it is eventually required to step aside of some paradigms and rigid postures that restrict the use of imaginative ideas to give solution to the difficulties encountered along the development of tasks.

REFERENCES

[1] J. Martinez, “Maintenance Strategies to Optimize the

Management of Power Transformers", *21th CIRED Conference* - Paper 024 (Frankfurt, 2011).

[2] J. Martinez, "Data Management Model for the Optimized Maintenance of Power Transformers", *22th CIRED Conference* - Paper 064 (Stockholm, 2013).

[3] J. Martinez, "Condition Assessment of Power Transformers: A Practical Methodology Approach", *23th CIRED Conference* - Paper 024 (Lyon, 2015).