A NOVEL SMART GRID ARCHITECTURE FOR THE MONITORING OF VOLTAGE DIPS ACCORDING TO ITALIAN RESOLUTION ARG/ELT 198/11

M. Delfanti
Politecnico di Milano – Italy
maurizio.delfanti@polimi.it

D. Falabretti
Politecnico di Milano – Italy
davide.falabretti@polimi.it

M. Fiori
A.S.SE.M. SpA – Italy
m.fiori@assemspa.it

ABSTRACT

This paper presents a novel method for the monitoring of voltage dips on MV networks, obtained as an evolution of the solution prescribed by the Italian Resolution ARG/elt 198/11. The monitoring architecture is included in the Smart Grid project of A.S.SE.M. SpA and makes extensive use of the IEC 61850 communication between the protection relays in primary substation. The main advantage of the approach proposed w.r.t. the standard one is a more effective and reliable classification of voltage dips according to their origin (MV network, HV network or "false dip").

INTRODUCTION

In Italy, Resolution ARG/elt 198/11 [1] required the DSOs to monitor Voltage Quality at the MV busbars of HV/MV Primary Substations (PSs), with particular reference to voltage dips, by Power Quality Monitors (PQMs) compliant with IEC 61000-4-30 standard [2]. Moreover, according to Res. ARG/elt 198/11, each DSO shall provide a central system to acquire and process the data recorded by the PQMs to identify the dips origin: the MV network, the HV system, or (in particular cases) saturation phenomena of voltage transformers (the so called "false dips"). After having processed data, the DSO shall make available results to AEEGSI (the Italian Energy Authority) and publish them in an aggregated form. The full deployment of the metering system is expected by 31 December 2014. After this deployment, AEEGSI envisages to exploit the results of the monitoring survey to set up proper regulations to improve Voltage Quality on transmission and distribution grids. This will be accomplished, initially, by publishing (and comparing) the power quality data; then, a proper regulation based on rewards/penalties mechanisms could be designed.

In this framework, Politecnico di Milano – Department of Energy is acting as advisor for A.S.SE.M. SpA, a small Italian DSO, to develop a monitoring architecture able to classify voltage dips with accuracy greater than the solution prescribed by Res. ARG/elt 198/11. The standard architecture has some limits, indeed, related to the fact that the dips classification is accomplished by the PQM mainly through information deduced by voltage measures at MV busbars of PS. In more detail, the standard architecture classifies a voltage dip as "false" according to the value of the 2nd harmonic of voltages measured during the event: if the 2nd harmonic exceeds a given threshold for a given time, the perturbation is classified as "false dip". Although this method showed preliminarily good performances in detecting "false dips" [3], its effectiveness in real scenarios is still under test.

According to the architecture prescribed by Res. ARG/elt 198/11, a voltage dip is classified as HV dip (i.e., responsibility of the TSO) when, comparing the data monitored on different MV busbars of PS, similar events are detected at the same time (similar start time, duration and residual voltage). This method, in general, proved to be reliable in identifying HV dips. However, it has two main drawbacks:

a) it is useful mainly for severe events, because, due to the different positions of the OLTCs of the HV/MV transformers, a HV perturbation could cause a voltage dip only on one MV busbar (on the other busbar, the voltage, despite subject to a rapid change, could still at values greater than 90% of nominal value);
b) it cannot be applied to PSs with only one HV/MV transformer, which are sometimes used in the Italian scenario; in these cases, the overcurrent PR on the MV side of HV/MV transformer is used: if an overcurrent is detected during a voltage dip, the MV origin is attributed to the event.

In perspective, an effective classification of voltage dips is a key to set up a Voltage Quality regulation on HV/MV grids: it allows to assign correctly the responsibility of each event to the relevant party (TSO, DSOs or users). Therefore, a novel architecture for the monitoring of voltage dips and their classification has been developed, so as to provide a solution to the above mentioned issues. The novel system is implemented in the PS of A.S.SE.M. SpA, which is involved in a Smart Grid experiment incentivized by AEEGSI according to Res. ARG/elt 39/10 [4]. The Smart Grid project aims to develop and test on field a set of innovative automation and control features (more details in [5][6]). In this framework, the capabilities of the IEC 61850 communication protocol [7] are exploited to effectively identify the origin of voltage dips through the novel monitoring system.

In the following, a detailed description of the architecture is provided, focusing on the logics used to assign to each voltage dip its actual origin. Then, some theoretical aspects on the sensitivity of the system in detecting dips are presented, and data collected on the A.S.SE.M. MV

grid in 2014 are reported, so to provide a preliminary analysis of the performance of the novel system compared to the standard solution. Finally, some conclusions are envisaged.

THE MONITORING ARCHITECTURE

The novel monitoring system is implemented in the PS Colotto (Figure 1) in San Severino Marche (a town of about 13,000 inhabitants in the Macerata province). The PS supplies two MV busbars (Red and Green busbar: rated voltage 20 kV), from which 10 MV feeders depart (5 from Red busbar and 5 from Green busbar).

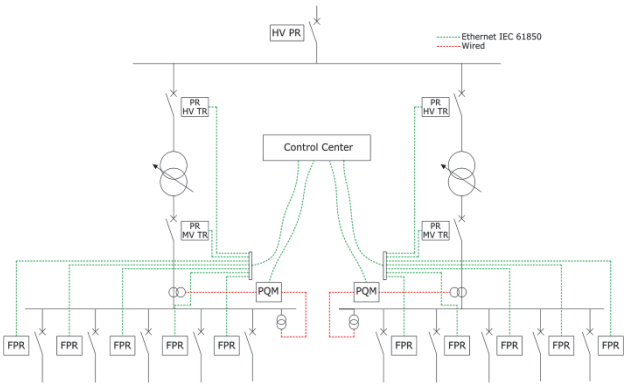

Figure 1. The novel architecture proposed for the monitoring of voltage dips.

The architecture proposed for the monitoring of MV voltage dips is shown in Figure 1.

Two PQMs (General Electric EPM 9900) [8] are installed at the MV busbars of PS in order to acquire all data relevant to voltage dips.

HV/MV Protection Relays (PRs) are monitored to properly identify the origin of dips (IED: Intelligent Electronic Device). In particular, when the protection threshold of a given PR is exceeded, the ID of the PR and the threshold involved in the event are filed, with the relevant timestamp, in a suitable database on the SCADA/DMS of the A.S.SE.M. control center. Such information is acquired via IEC 61850 protocol on Ethernet LAN (green connections in Figure 1). It is worth noting that the information related to the triggering of PRs (occurring if the overcurrent/overvoltage persists for a time greater than the intentional delay set by user) is not used by the experimental architecture to identify the origin of voltage dips (this information is acquired anyway, to keep track of supply interruptions involving each MV feeder). Atop of each MV feeder there is a circuit breaker piloted by a PR (FPR in Figure 1) including phase overcurrent (50/51) and directional earth fault (67N) protections. HV/MV transformers and MV busbars are protected against overloads and faults by phase overcurrent (50/51) and neutral voltage displacement (59N) protection functions (MV TR PR in Figure 1). On these relays also phase-to-phase over/undervoltage protections (59/27) are enabled, but they are not exploited in the envisaged architecture. Moreover, a 50/51 PR on the HV side (rated voltage 132 kV) of HV/MV transformers is used to detect faults within transformers (HV TR PR). Upstream the HV busbar, a further PR (59, 59N, 27) is installed, however this relay is not involved in the monitoring architecture. Table 1 shows the settings of the PRs in the A.S.SE.M. PS, which are significant for the functioning of the system proposed. The values are expressed as currents/voltages measured at the primary winding of CTs/VTs.

Protection Relay	50/51	59N/67N
HV Transformer R	310 A	-
HV Transformer G	310 A	-
MV Transformer R	900 A	1732 V
MV Transformer G	900 A	1732 V
Feeder 1R	180 A	2 A - 231 V
Feeder 2R	126 A	2 A - 231 V
Feeder 3R	126 A	2 A - 231 V
Feeder 4R	280 A	2 A - 231 V
Feeder 5R	280 A	2 A - 231 V
Feeder 1G	300 A	2 A - 231 V
Feeder 2G	180 A	2 A - 231 V
Feeder 3G	180 A	2 A - 231 V
Feeder 4G	180 A	2 A - 231 V
Feeder 5G	180 A	2 A - 231 V

Table 1. Settings of the protection relays in PS (R=Red Busbar; G=Green Busbar).

The existing (inductive) VTs, originally installed for protective purposes, are used by PQMs to acquire all data about voltages at MV busbars (accuracy class 0.5). The VTs are wired, both on the MV and LV sides, with a Wye connection scheme (Figure 2). Moreover, the PQMs acquire the phase currents which flow in the HV/MV transformer (by Current Transformers, CTs, in Figure 2). Although the measured currents are not strictly required for the voltage dips classification, they can be useful for ex-post analyses and active/reactive power metering.

In order to properly correlate the voltage measures collected by PQMs with the data recorded by PRs in PS, the monitoring and protection devices must be accurately synchronized. To this purpose, SNTP (IEC 61850 devices) and IRIG-B (Power Quality Monitors) synchronizations are adopted.

The data acquired by PQMs are stored (as the PRs' pickup data) in a suitable database in the DSO control center. Then, they are processed in order to classify voltage dips according to their origin and to obtain the aggregated information required by Res. ARG/elt 198/11. For each voltage dip recorded by PQMs, the following data are provided:

1. sequential number of the event;
2. MV busbar and phase voltages involved;
3. start time (at least expressed with an accuracy of hundredths of a second);
4. duration (at least expressed with an accuracy of hundredths of a second);

5. residual voltage (% of the nominal value);
6. origin (HV, MV, "false dip").

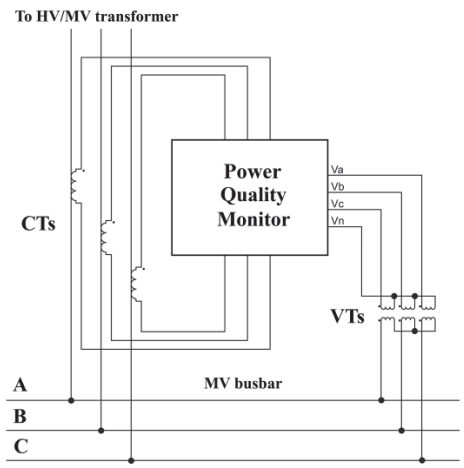

Figure 2. Connection scheme of each PQM to VTs and CTs.

In addition, with reference to each MV busbar of PS, a set of summary information related to the number and severity of the events recorded is made available to the Italian Authority:

1. summary table of voltage dips detected at MV busbars, according to the EN 50160 format, with evidence of the thresholds of immunity class 2 and class 3 (defined according to standards EN 61000-4-11 [9] and EN 61000-4-34 [10]);
2. total number of voltage dips more severe than the immunity class 2 threshold;
3. total number of voltage dips more severe than the immunity class 3 threshold.

In order to identify the origin of voltage dips, the logic in Figure 3 is applied: it provides to assess, when a voltage dip is detected, the conditions listed below. The evaluation is performed in sequence: if a condition is verified, the logic assigns the proper origin to the voltage dip, otherwise the process continues by assessing the next condition.

1. If a PR on a MV feeder detects a phase-overcurrent (pickup of 50/51 protection functions), the disturbance is caused by a fault (or an overload) in the MV/LV grid. So, the voltage dip is classified as MV perturbation.
2. If a phase-to-earth fault is detected by a PR on a MV feeder (67N), without the triggering of phase-overcurrent protection functions, the event is a "false dip", due to the saturation of VTs.
3. If the PR on the MV side of the HV/MV transformer detects a phase-overcurrent (50/51), the voltage dip is caused by a short-circuit at the MV busbars of PS. Then, the origin of the dip is the MV power system.
4. If none of the previously situations occurs, and the PR on the MV side of the HV/MV transformer (59N PR on MV busbars) detects a phase-to-earth fault, the voltage dip is classified as "false dip".
5. If the PR on the HV side of the HV/MV transformer detects a phase-overcurrent (50/51), the voltage dip is caused by a short-circuit in the HV/MV transformer of PS. Also in this case, the event is responsibility of the DSO, so the dip is assigned the MV origin.
6. Finally, if none of the PRs in PS detects an overcurrent and/or phase-to-earth faults, the voltage dip is due to disturbances from the HV system, so the origin assigned is HV.

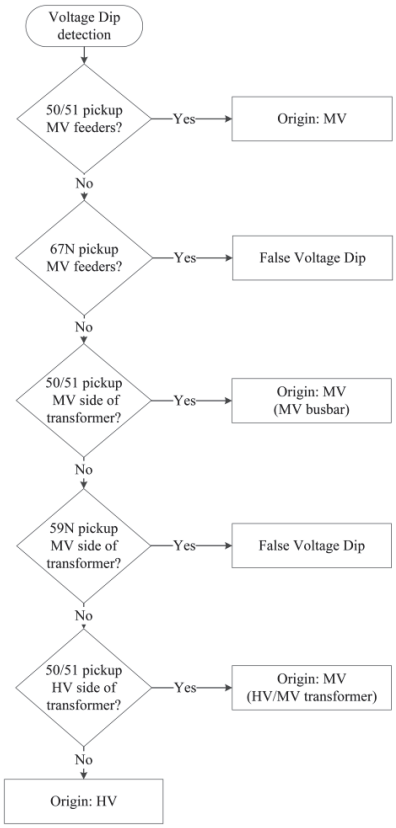

Figure 3. Logic applied to classify voltage dips according to their origin.

VOLTAGE DIPS CLASSIFICATION AND PROTECTIONS SENSITIVITY

In order to accomplish the correct classification of voltage dips according to their origin, a suitable sensitivity of PRs in detecting faults on MV grid is crucial. This aspect could be critical especially for phase-to-phase overcurrent protections, which could not detect a fault if overcurrents do not exceed the fixed threshold (e.g., in the presence of high resistance faults): in these cases, the monitoring system would attribute a HV origin to dips caused by the DSO. To prove the effectiveness of the novel architecture in detecting the MV origin of voltage dips, an analysis of the sensitivity of phase-to-phase overcurrent protections is performed. Figure 4 reports the phase overcurrents measured by 50/51 PRs according to the residual voltage at the MV busbars. Each

characteristic has been obtained by changing the amplitude of the fault impedance and maintaining constant the X/R ratio: increasing the impedance's amplitude, overcurrents reduce and residual voltages increase, moving to the right of Figure 4.

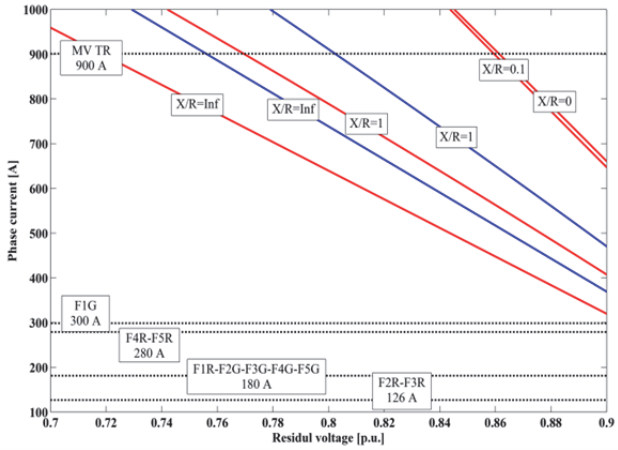

Figure 4. Phase current measured by 50/51 PRs (Ampere on the primary winding of CTs), according to the residual voltage (p.u.) at the MV busbars.

Each characteristic refers to a X/R ratio and a type of fault. The red and blue trends are relevant to, respectively, two-phases and three-phases faults. The characteristics with the same color are obtained changing the X/R ratio (∞, 1, 0.1, 0): with same phase overcurrent, increasing the X/R ratio, the residual voltage reduces (moving to the left of Figure 4). Some trends are not visible in Figure 4 (trends of three-phases faults with X/R ratio equal to 0.1 and 0) because the overcurrents occurring during the fault are always greater than the maximum value of y-axis (1000 A). The short-circuit power in the point of connection to the HV grid has been assumed equal to 493 MVA: i.e. the average minimum conventional short-circuit power declared by Terna. This is a conservative estimation, being the short-circuit value assessed in the hypothesis of (n-1) operation of the HV network. Moreover, in the perspective of a future deployment of the novel architecture to other PSs, the expected sensitivity of PRs, in the most of cases, would be better than that assessed in the A.S.SE.M. scenario: most of buses of the Italian HV network has indeed a greater short-circuit power (the mean value on all 220-132 kV Italian buses is about 1300 MVA). The HV/MV transformer (25 MVA) is modeled by its series parameters (Vsc=14.5%; X/R=10).

One can observe that phase overcurrent PRs are able to effectively detect all faults causing voltage dips on MV busbars. In fact, in the worst case, two-phases short-circuits with high impedance and X/R ratio = ∞, which cause a voltage dip with residual voltage near to 0.9, overcurrents are equal to about 320 A. With more severe events (e.g., voltage dips below the immunity class 2 and class 3), overcurrents are always greater. Although these results refer to the specific scenario of the A.S.SE.M. PS, they have a general validity. In fact, the settings of A.S.SE.M. PRs on MV feeders are consistent with the standard values typically adopted by Italian DSOs. In addition, the results are relevant to the case of a 20 kV network. In Italy, this is one of the highest voltage levels used on electricity distribution grids. For MV grids with lower voltage levels, faults detection should be easier, due to the greater short-circuit currents (the settings of phase overcurrent PRs, depending on conductors ampacity, typically do not differ significantly from already mentioned values).

Regarding the overcurrent PR on MV side of HV/MV transformer, it is often unable to provide a reliable classification of voltage dips: the detection of events with residual voltage up to 0.72 could indeed be missed. This aspect could be critical for short-circuits occurring on MV feeders, but it is not a problem for faults on MV busbars, due to the value of overcurrents involved (the only faults that must be detected by the PR on the MV side of HV/MV transformer, in the novel architecture envisaged). This is an important aspect, considering that the strategy prescribed by Res. ARG/elt 198/11 to classify voltage dips in PSs with only one HV/MV transformer relies on the performance of the PR on the MV side of the transformer in detecting faults. According to our results, this approach is not completely reliable in classifying non-severe events (e.g., voltage dips above immunity classes 2 and 3). This situation is even worse in PSs equipped with larger HV/MV transformers (e.g., 40/63 MVA). Actually, the phase overcurrent protection shall be coordinated with the transformer's load currents, which increases proportionally to transformer size. Therefore, at the rising of the transformer's size, the sensitivity of the overcurrent PR in detecting faults reduces (e.g., for transformers rated 40 and 63 MVA, the phase overcurrent PR should be set to, respectively, 1500 and 2350 A, on a 20 kV network).

VOLTAGE DIPS MONITORING SURVEY

Table 2, Table 3 and Table 4 report the voltage dips collected on the A.S.SE.M. PS during a period of about 7 months in 2014. Data refer to both MV busbars. In detail, Table 2 shows the overall number of voltage dips occurred on the network classified according to EN 50160 prescriptions; while Table 3 and Table 4 refer to, respectively, "false dips" and voltage dips with MV origin: i.e., the events on the responsibility of the DSO (voltage dips in Table 2 reported neither in Table 3 nor in Table 4 are HV events, i.e. TSO's responsibility).

According to the monitored data, 35.52% (6.18%) of events are more severe than immunity class 2 (class 3). Therefore, despite the considerable amount of voltage dips occurred during the monitoring period, the users sensitive to voltage quality are vulnerable only to a small percentage of events: i.e., voltage dips out of immunity class 3. In fact, to prevent the negative effects of voltage

dips on electrical equipment, the user can adopt class 2 and class 3 devices. However, preventive measures hardly exist against voltage dips more severe than immunity class 3.

Residual Voltage [%]	10 ≤ t ≤ 200	200 < t ≤ 500	500 < t ≤ 1000	1000 < t ≤ 5000	5000 < t ≤ 60000
90≥u>80	108	7	1	7	0
80≥u>70	51	1	1	0	0
70≥u>40	70	4	0	0	0
40≥u>5	5	3	1	0	0
5≥u	0	0	0	0	0

Table 2. Overall number of voltage dips observed on both MV busbars of PS.

With respect to the total amount of voltage dips collected on MV busbars, the 49.03% has been classified as "false dips". The 38.58% of these events are more severe than immunity class 2 and 5.51% of class 3.

Residual Voltage [%]	10 ≤ t ≤ 200	200 < t ≤ 500	500 < t ≤ 1000	1000 < t ≤ 5000	5000 < t ≤ 60000
90≥u>80	44	2	0	1	0
80≥u>70	31	1	1	0	0
70≥u>40	44	2	0	0	0
40≥u>5	1	0	0	0	0
5≥u	0	0	0	0	0

Table 3. Number of "false dips" observed on both MV busbars of PS.

Finally, voltage dips with MV origin (see Table 4) are 17.76% of "true dips" (consequently, "true dips" with HV origin are 33.21% of the total amount).

Residual Voltage [%]	10 ≤ t ≤ 200	200 < t ≤ 500	500 < t ≤ 1000	1000 < t ≤ 5000	5000 < t ≤ 60000
90≥u>80	9	2	0	5	0
80≥u>70	6	0	0	0	0
70≥u>40	20	0	0	0	0
40≥u>5	2	2	0	0	0
5≥u	0	0	0	0	0

Table 4. Number of voltage dips with MV origin observed on both MV busbars of PS.

CONCLUSION

This paper presented the architecture developed in the PS managed by A.S.SE.M. SpA to classify voltage dips occurring on MV network according to their origin. The innovative monitoring system proposed makes extensive use of ICT resources, which are available thanks to the involvement of the distribution grid in one of the Smart Grid projects supported by Italian Energy Authority through Res. ARG/elt 39/10. The main purpose of the novel architecture is to overcome some issues of the standard solution prescribed by Res. ARG/elt 198/11. These are mainly related to the reliable detection of "false dips" and to the classification of voltage dips occurring in PSs with only one HV/MV transformer. In particular, with reference to the latter point, the numerical analyses highlighted that the phase overcurrents protection on the MV side of HV/MV transformers is unable to detect a significant number of events, especially if these are less severe than immunity class 2 and 3.

REFERENCES

[1] AEEGSI, Resolution ARG/elt 198/11, "Integrated text of the Authority on the quality of the services of electricity distribution and metering for the regulatory period 2012-2015", 2011.

[2] Electromagnetic compatibility (EMC) – Part 4-30: Testing and measurement techniques – Power quality measurement methods, Standard IEC 61000-4-30.

[3] R. Chiumeo, M. de Nigris, L. Garbero, C. Gandolfi, L. Tenti, E. Carpaneto, 2010, "Implementation of a New Method for an Improved Voltage Dips Evaluation by the Italian Power Quality Monitoring System in Presence of VT Saturation Effects", ICREPQ 2010, Granada.

[4] AEEGSI, Resolution ARG/elt 39/10, "Procedures and criteria for the selection of investments admissible for incentives pursuant to paragraph 11.4, letter d) of Annex A to Authority for Electricity and Gas Resolution No. 348/07 of 29th December 2007", 2010.

[5] M. Delfanti, D. Falabretti, M. Fiori, M. Merlo, 2015, "Smart Grid on field application in the Italian framework: The A.S.SE.M. project", *Electr. Power Syst. Res.*, vol. 120, 56-69.

[6] M. Delfanti, D. Falabretti, M. Fiori, M. Merlo, 2015, "Transfer trip of loss of mains protections and logic selectivity by IEC 61850 protocol: an analysis based on experimental data", CIRED 2015, Lyon.

[7] Communication networks and systems in substations, Standard IEC 61850, 2013.

[8] General Electric EPM 9900 website. http://www.gedigitalenergy.com/multilin/catalog/epm9900.htm

[9] Electromagnetic compatibility (EMC) - Part 4-11: Testing and measurement techniques - Voltage dips, short interruptions and voltage variations immunity tests, Standard 61000-4-11, 2004.

[10] Electromagnetic compatibility (EMC) - Part 4-34: Testing and measurement techniques - Voltage dips, short interruptions and voltage variations immunity tests for equipment with input current more than 16 A per phase, Standard 61000-4-34, 2005.