CONSIDERATIONS ABOUT REACTIVE POWER UNDER NONSINUSOIDAL CONDITIONS

Ezequiel Junio DE LIMA
UFU[1] – Brazil
ezequiel@eel.ufu.br

Sérgio Ferreira DE PAULA SILVA
UFU – Brazil
sergio@feelt.ufu.br

Antônio Carlos DELAIBA
UFU – Brazil
delaiba@ufu.br

ABSTRACT

The development of an electric power theory under non-sinusoidal conditions is a wide and complex topic. The first researches in the area date back from 1927 and 1932 and, up to now, there is no consensus. The main issue is to understand how the power flows in an electric circuit works since classic definitions of electric power, presented in engineering textbooks, do not reliably depict the energy flow's interactions in systems with distorted voltage and current waveforms. In this context, the qualification and quantification of reactive power is the most controversial. Thus, this paper aims to contribute to studies in non-sinusoidal systems with focus on power definitions with a special attention to reactive power and its implications.

INTRODUCTION

Why an electrical load does usually requires an apparent power bigger than the active part? Moreover, how the apparent power of the supply source can be reduced without decreasing the active power of an electrical load?

According to Andrzej Firlit [1], the study of electrical power theory with harmonic distortions is leading to the knowledgement of how the energy transfer works in an electrical circuit. As a result, the first question is closely related to the interpretation of the energy phenomena in electrical circuit and the second is a question linked to the practice. These two questions, seemingly simple, proven to be extremely tough to answer.

Power definitions under non-sinusoidal conditions is a comprehensive and complex subject. The first studies date back to 1927 with Budeanu [2] and 1932, with Fryze [3]. Since then, there are almost a hundred years and, until now, there is no consensus [4].

The basic concepts shown in electrical circuits' books [5] [6] are widely accepted when dealing with purely sinusoidal signals. However, the extension of these concepts to networks whose signals are distorted, i.e., non-sinusoidal, is not that simple because it is necessary to understand the energy flow's behaviour and interactions in these situations.

There are several rules and regulations [7] [8] covering non-sinusoidal signals. In a general way, they try to set limits for harmonic distortion, however, these distortions remain present on voltage and current signals and tend to increase due the constant multiplication of electronic equipment observed nowadays.

Given this conjuncture, it is inevitable a theory able to fully explain the power phenomena in non-sinusoidal conditions and still be compatible with the power theory used in purely sinusoidal systems [9].

Basically, the electric power can be divided into two parts, a portion called active power and a reactive portion most recently called non-active [10] [11] [12].

As for the active power, there are no further questioning about its formulations and physical principles in purely sinusoidal or distorted conditions. On the other hand, as indicated in [13] [14] [15] [16] [17], there are many different formulations and doubts about the physical principles of reactive power.

As an example, we can mention the proposal made by IEEE in [10], where the most controversial part are the definitions and physical interpretations of reactive power and distortion power.

It is known that the reactive power is important for voltage regulation in transmission lines, distribution systems and for proper operation of various electrical machines. In this context, scientists and electrical engineers have presented various concepts, models and mathematical tools in order to better quantify such power. Despite the applied efforts, still there is no consensus. The aim of this paper is to analyse, through mathematical development in time domain, non-sinusoidal signals of voltage and current at purely reactive elements and its implications.

REACTIVE POWER UNDER NON-SINUSOIDAL CONDITIONS

The Limitation of Steinmetz's Model

In the nineteenth century, a simple study in purely sinusoidal condition was a laborious work, mainly by the lack of mathematical tools to help engineers and make the process simpler. In 1893, Karl August Rudolf Steinmetz (1865-1923) revolutionized the AC circuit analysis, being the first to use complex numbers and phasor representation. His technique, still used extensively nowadays, is invaluable [19].

Castro-Nuñez [13] stated that, although Steinmetz's technique allows determining the appropriate values in non-sinusoidal conditions, the technique requires a

[1] Acronym for Universidade Federal de Uberlândia or, in English, Brazilian Federal University of Uberlândia.

separate analysis for each harmonic and each analysis yields a set of results. Regrettably, these different sets of results are mathematically unrelated in frequency-domain. Besides that, the process to convert a non-sinusoidal signal from time domain to frequency domain may cause ambiguity.

These limitations have been overlooked because it is always possible to go back to time domain and find the amplitudes of the desired signals. However, these same limitations led to various proposals and interpretations of physical phenomena involved in the exchange of energy between elements of electric circuits (specifically the characterization of the several electrical powers involved).

Reactive Power Study

Because of above constraints, this article aimed to use time domain techniques to compose an algebraic model for basic reactive elements of electrical circuits and therefore get higher subsidies for the calculation of reactive power.

The physical criteria that will guide this study will be given for what happens inside of a reactive load. This load receives energy whose instantaneous' values are variable, but always in the same direction and having an average finite value, representing the intrinsic energy stored on the form of electromagnetic or electrostatic fields [2].

Capacitor

Let us observe Fig 1. A voltage *v(t)* feeds the capacitor and it is represented by:

$$v(t) = \sum_{h=1}^{N} V_{m_h} \cos(h\omega t) \qquad (1)$$

Where *N* is a finite set of voltages; *h* indicates the harmonic order; *Vm* is the maximum value (or peak value) of voltage *v(t)*.

The current flowing through the capacitor, as stated by the classical electrical circuits' theory, is given by:

$$i_C(t) = C\frac{dv(t)}{dt} = C\sum_{h=1}^{N} V_{m_h}\, h\omega \cos(h\omega t + \tfrac{\pi}{2}) \qquad (2)$$

Multiplying the two sides of (2) by $dv(t)/dt$ and calculating the average value given by (3),

$$\bar{V}[f(x)] = \frac{1}{T}\int_0^T f(x)dx \qquad (3)$$

One can get the following result:

$$\frac{1}{T}\int_0^T i_C(t)\frac{dv(t)}{dt}dt = \frac{1}{T}\int_0^T C\left[\frac{dv(t)}{dt}\right]^2 dt \qquad (4)$$

Solving equation (4) we get

$$C = [\sum_{h=1}^{N} V_h I_h sen(\pm\varphi_h)\, h]/[\omega \sum_{h=1}^{N} (V_h)^2 h^2] \qquad (5)$$

Where, *V* and *I* are, respectively, the current and voltage *rms* values, and φ_h is the angle between current and voltage. The harmonic order is indicated by the subscript *h*. The detailed development from (4) to (5) is shown in [18].

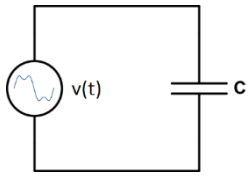

Fig. 1 Capacitive Circuit

Equation (5) shows the possibility of modelling a capacitor, only using the voltage and current harmonic spectrum. Note that equation (5) is a result from time domain analysis and therefore belongs to him exclusively. Defining $\sum_h^N V_h I_h sen(\pm\varphi_h) = Q_h$ in eq. (5), one can get

$$\sum_{h=1}^{N} Q_h = \sum_{h=1}^{N} \frac{(V_h)^2}{X_{c_h}} \qquad (6)$$

Considering that the reactive power is the power due to applying a voltage to a purely reactive element such as the capacitor, equation (6) result in a sum of reactive powers of each harmonic order, as defined in [2] by Budeanu's theory.

Inductor

Let us observe now Fig 2. In a similar way to that presented in the previous section, the current flowing through the inductor, fed by a voltage defined in eq. (1), is given by:

$$i_L(t) = \frac{1}{L}\int v(t)dt = \frac{\sqrt{2}}{L}\sum_{h=1}^{N} V_h \frac{sen(h\omega t)}{h\omega} \qquad (7)$$

To simplify, the time integral of voltage will be written as *y(t)*, i.e:

$$\int v(t)dt = y(t) \qquad (8)$$

Then, multiplying the two sides of (8) by *y(t)* and calculating the average value, one can get:

$$\frac{1}{T}\int_0^T i_L(t)y(t)\, dt = \frac{1}{T}\int_0^T \frac{1}{L}[\, y(t)]^2\, dt \qquad (9)$$

It can be shown that the equation (9) results in:

$$L = \sum_{h=1}^{N} \frac{(V_h)^2}{h^2} / \omega \sum_{h=1}^{N} \frac{V_h I_h sen(\pm\varphi_h)}{h} \qquad (10)$$

The detailed development from (9) to (10) is also shown in [18].

Equation (10) shows the possibility of modelling an inductor, only using the voltage and current harmonic spectrum. As we did before in the previous section, replacing $\sum_h^N V_h I_h sen(\pm\varphi_h)$ by Q_h in eq. (10), it can be found:

$$\sum_{h=1}^{N} Q_h = \sum_{h=1}^{N} \frac{(V_h)^2}{X_{L_h}} \qquad (11)$$

Equation (11) is equivalent to equation (6), and using the same considerations of the previous section, equation (11) shows that the output from an inductor fed with a non-sinusoidal voltage results in the summation of reactive powers of each harmonic order, just as defined by Budeanu's theory.

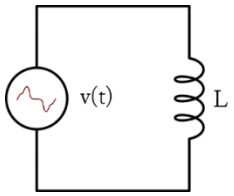

Fig. 2 Inductive Circuit

Thus, it is noted that the total power of this component is related to classical power analysis and in accordance to Budeanu's propositions, as well the capacitor.

LABORATORY ANALYSIS

Experiment

In order to validate the mathematical models presented above, this section details the physical arrangement mounted in laboratory for testing under controlled conditions.

The experiment intended to represent a conventional electric system, consisting mostly of elements R, L and C. In addition, a full-wave rectifier was used as a non-linear load to amplify busbar distortions, Fig. 3. In this system, analysis will focus the reactive power from L and C components.

The rms voltage was set to 100 V due to power constraints of used components. Fig. 4 shows the physical arrangement mounted in laboratory.

Voltage and current harmonic spectrum, obtained from the assay, are shown in Fig. 5 for R, L and C components.

Results

Tab. I summarizes the results of applying the equations (5); (6); (10) and (11) to the voltage and current collected data. It can be seen that the equations (5) and (11) provide a satisfying method for modelling the L and C elements whose relative error between nominal value and measured value was 0.64% and 0.37%, respectively. In addition, it proves the equalities presented by equations (6) and (12) where small differences in values are assigned to numerical approximations and equipment's intrinsic errors.

Computational assessment

To validate the results obtained, it was implemented in ATP software the laboratory arrangement shown in Fig. 3. The ATP software was used for being a program already established in the academic community, free and versatile.

Thus, Fig. 6 shows the model in ATP and the respective components values. In sequence, Figs. 7 and 8 shows the voltage source spectrum and the RLC load voltage spectrum, respectively.

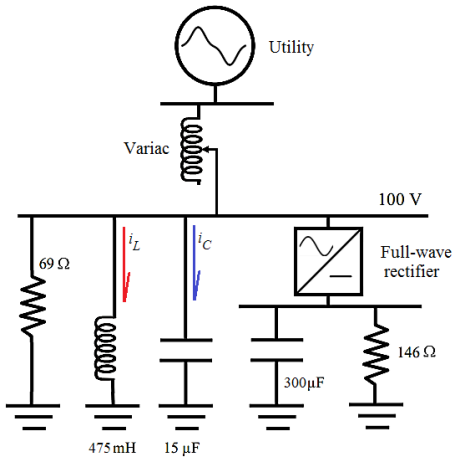

Fig. 3 Experimental arrangement.

Fig. 4 Assembly performed in the laboratory

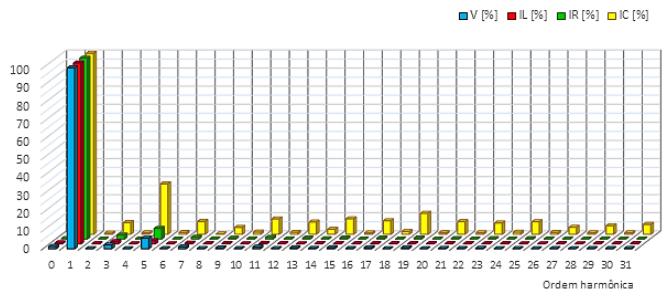

Fig. 5 Load's Harmonic spectrum

In addition, the Fig.9 illustrates the simulated current's harmonic spectrum for the RLC load.

Tab. II shows simulation results. It can be seen that equations (5) and (10) outputs a satisfying value for L and C. It is also observed that the equalities presented by (6) and (11) are confirmed, where small differences are assigned to numerical approximations.

Mostly, it is seen that the results were close to those found in the practical test, as expected.

REACTIVE POWER COMPENSATION

Once obtained equations to calculate the reative power of the capacitor and the inductor, the concern now, is to

reduce the apparent power of the power supply without decrease the active power delivered to the electric load. For that, reactive power compensation can be achieved equaling equations (5) and (10). Thus one obtains,

$$LC = \sum_{h=1}^{N} \frac{(V_h)^2}{h} / (\omega_1)^2 \sum_{h=1}^{N} h(V_h)^2 \qquad (12)$$

Where, one can isolate the variable of interest (L or C) depending on the case. Thus, to exemplify the use of the equation (12), consider the system of Fig. 10.

It is desired to compensate the reactive load of 120kVA through a capacitor bank, calculated according to (12). Thus, Tab. III shows the values of power, voltage and current for two simulated cases. The first without the capacitor and the second, with the capacitor connected to the system.

As pointed out by Czarnecki in [16] and [20], in above example may be noted that even reactive power having been fully compensated, there were no improvements in system power factor. This is because the Budeanu's reactive power, QB, not only affects the source apparent power, S, but It also affects the Budeanu's distortion power, DB.

CONCLUSIONS

This article addressed the reactive power under non-sinusoidal conditions. It has been the target of the scientific community efforts, searching for a better solution to represent the reactive energy phenomena under said arrangements.

In this context, we sought an approach in time domain in order to find an equation to describe the consumed power in reactive elements (capacitor and inductor). Thus, in the presented cases, the total power of these elements are related to the classical analysis postulated by Budeanu in [2], i.e., the algebraic sum of the reactive power of each harmonic order.

It presents yet a way to calculate C or L equivalent of any load since the voltages and currents harmonic spectrum previously known. This method was verified by laboratory analysis presented.

It was observed on reactive compensation study section that, even taking the value of Q to zero, there was no reduction of apparent power nor improvements in power factor. This aspect of Budeanu's theory was reported by Czarnecki in his article [16] and indicates that for nonlinear systems, the simple reactive power compensation does not imply improved total power factor. For this reason, Czarnecki states that QB is related to DB and therefore for power factor effective improvement is required the distortion power compensation i.e., the use of filters to reduce harmonic distortions.

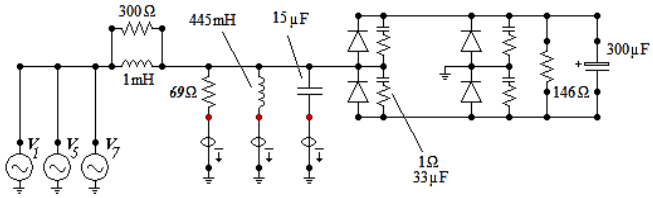

Fig. 6 ATPDraw Model

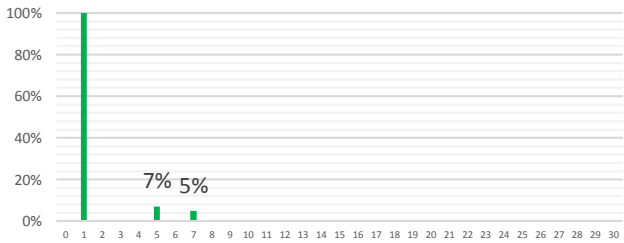

Fig. 7 Voltage Source harmonic spectrum

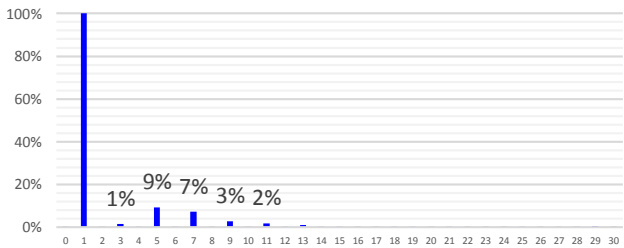

Fig. 8 RLC load harmonic spectrum.

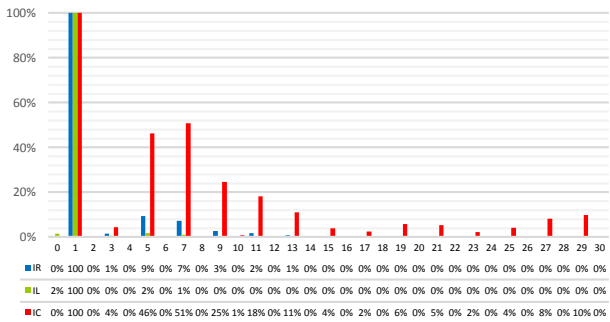

Fig. 9 simulated current's harmonic spectrum for the RLC load.

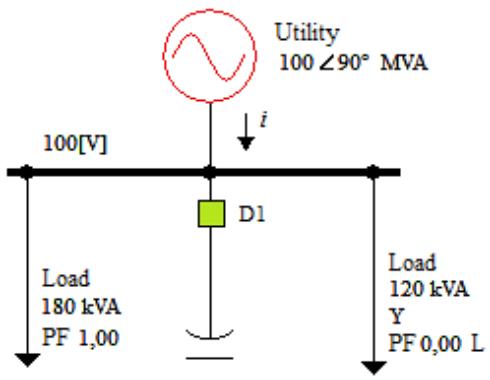

Fig. 10 simulated system for reactive power compensation study.

Tab I Results obtained from experiment

	Measured Value	Calculated Value	Relative Error	$Q = \sum_{h=1}^{N} \frac{(V_h)^2}{X_h}$	$Q = \sum_{h=1}^{N} V_h I_h sen(\pm\varphi_h)$
L	445,00 mH	447,8517 mH	0,64%	61,6843 VAr	61,7053 VAr
C	15,58 μF	15,6376 μF	0,37%	62,7747 VAr	63,6588 VAr

Tab II Results obtained from computational assessment

	Nominal value	Calculated Value	Relative Error	$Q = \sum_{h=1}^{N} \frac{(V_h)^2}{X_h}$	$Q = \sum_{h=1}^{N} V_h I_h sen(\pm\varphi_h)$
L	445,00 mH	445,1991mH	0,045%	60,2904 VAr	60,2904 VAr
C	15,00 μF	14,9911 μF	-0,059%	62,2713 VAr	62,2546 VAr

Tab III Reactive power compensation results

Quantidade	Unidade	Caso 1	Caso 2
V_1	[V]	100,000	100,000
V_5	[V]	20,000	20,000
V_7	[V]	14,286	14,286
V_{rms}	[V]	102,980	102,980
I_1	[A]	1249,000	1053,000
I_5	[A]	209,690	535,800
I_7	[A]	149,130	528,690
I_{rms}	[A]	1275,230	1294,580
L	[mH]	663,146	663,146
C	[μF]	-	7,988
S	[kVA]	227,450	**230,900**
P	[kW]	190,870	190,870
Q_B	[kVAr]	121,310	**0,000**
D_B	[kVAd]	24,180	**129,930**
FP	-	0,839	**0,8270**

REFERENCES

[1] A. Firlit, "Power Theory with Non-sinusoidal Waveforms," em *Handbook of Power Quality*, 1ª ed., A. Baggini, Ed., Chichester, John Wiley & Sons Ltd, 2008, pp. 27-51.

[2] C. Budeanu, Puissances réactives et fictives, Bucarest: Institut National Roumain, 1927.

[3] S. Fryze, "Wirk-, Blind-, und Scheinleistung in Elektrischen Stromkreisen Mit Nichtsinusoidalformingen Verfauf von Strom und Spannung" *Elektrotechnische Zeitschrift*, vol. 53, pp. 596-599,, 1932.

[4] L.-G. MANESCU, "L'étude du régime non-sinusoïdal dans les systèmes électriques," Grenoble, 1998.

[5] R. L. BOYLESTAD, Introdução à análise de circuitos, 10ª ed., Pearson Education do Brasil, 2004.

[6] J. D. IRWIN e R. M. NELMS, Análise Básica de Circuitos para Engenharia, 10ª ed., Rio de Janeiro: LTC Editora, 2013.

[7] AGÊNCIA NACIONAL DE ENERGIA ELÉTRICA, "Módulo 8 - Qualidade da Energia Elétrica," em *Procedimentos de Distribuição de Energia Elétrica no Sistema Elétrico Nacional – PRODIST*, Brasília, ANEEL, 2012.

[8] AGÊNCIA NACIONAL DE ENERGIA ELÉTRICA, Resolução Normativa Nº 414, Brasília: ANEEL, 2010.

[9] L. S. Czarnecki, "Currents' Physical Components (CPC) concept: A fundamental of power theory," em *International School on Nonsinusoidal Currents and Compensation, 2008.*, Lagow, 2008.

[10] IEEE Standard 1459, "IEEE Standard Definitions for the Measurement of Electric Power Quantities Under Sinusoidal, Nonsinusoidal, Balanced, or Unbalanced Conditions," 2010.

[11] A. E. Emanuel, Power Definitions and the Physical Mechanism of Power Flow, Wiley, 2010.

[12] M. Castilla, J. C. Bravo, J. C. Montaño, M. Ordóñez e A. López, "Considerations on the Non-Active Power Using Geometric Algebra," em *2011 International Conference on Power Engineering, Energy and Electrical Drives*, Torremolinos, 2011.

[13] M. D. Castro-Núñez, The Use of Geometric Algebra in the Analysis of Non-sinusoidal Networks and the Construction of a Unified Power Theory for Single Phase Systems - A Paradigm Shift, Calgary, Alberta: University of Calgary, 2013.

[14] M. E. Balci e M. H. Hocaoglu, "Comparison of Power Definitions for Reactive Power Compensation in Nonsinusoidal Conditions," *11th International Conference on Harmonics and Quality of Power*, pp. 519-524, 2004.

[15] F. Ghassemi, "What is Wrong With Electric Power Theory and How it Should be Modified," em *IEE Ninth International Conference on Metering and Tariffs for Energy Supply*, Birmingham, 1999.

[16] L. S. Czarnecki, "What is wrong in Budeanu concept of reactive power and distortion power and why it should be abandoned," *IEEE Transactions on Instrumentation and Measurement*, Vols. %1 de %2IM-36, nº 3, p. 834–837, Setembro 1987.

[17] L. S. Czarnecki, "On Some Misinterpretations of the Instantaneous Reactive Power p-q Theory," *IEEE TRANSACTIONS ON POWER ELECTRONICS*, vol. 19, nº 3, pp. 828-836, maio 2004.

[18] E. J. Lima, Reflexões sobre as teorias de potência elétrica em regime não senoidal (Dissertação de mestrado), Uberlândia: UFU, 2014.

[19] C. P. Steinmetz, "Complex quantities and their use in electrical engineering," em *Proceedings of International Electrical Conference*, New York, 1894.

[20] L. S. Czarnecki, "Budeanu and Fryze: Two frameworks for interpreting power properties of circuits with nonsinusoidal voltages and currents," *Electrical Engineering*, vol. 80, nº 6, pp. 359-367, Dezembro 1997.