VOLT VAR CONTROL AT THE LV DISTRIBUTION LEVEL IN THE GREENLYS PROJECT

Jean WILD
SCHNEIDER ELECTRIC – France
jean2.wild@schneider-electric.com

Guillaume ROUPIOZ
ERDF – France
guillaume.roupioz@erdf-grdf.fr

Yves CHOLLOT
SCHNEIDER ELECTRIC – France
yves.chollot@schneider-electric.com

ABSTRACT

Volt VAr control operations on the distribution grid have been traditionally operated in France at the primary substation level for years. Solutions, such as automatic OLTC "on line tape changer" for HV/MV transformation have been used to manage the MV secondary voltage at the head of the MV distribution grid. Furthermore capacitor banks associated to electronic devices at the primary substation have been used for many years to manage VAr flows and therefore contribute to voltage level control. Managing the opening point of the MV loop is also a mean used by the French DSO's. This management was, up to now, enough for a centralized production scheme, and has permitted to stay within the allowed voltage band defined by EN50160 [1] at the final customer side. Due to decentralized generation injected at the distribution grid level, the Volt VAr control has to be generalized at the LV grid level.

INTRODUCTION

In France, there is an important increase of decentralized energy sources at the distribution grid level: Photo Voltaic, Wind energy, flexible loads such as HVAC operated through demand response programs, Electrical vehicle, CHP are more and more modifying the grid voltage level at localized portions. Therefore, a same LV distribution grid customer can in the same day brush against the minimum & maximum voltage limits within the allowed band. 95% of the renewable production is connected to the distribution grid today. In 2020, it is anticipated that there will be 1 million PV producers at the distribution grid level and that EV might represent between 1 & 2% of the total electric consumption.

GREENLYS FIELD TEST AREAS

GreenLys is the first demonstrator to test the operation of a Smart Grid as a whole, involving all stakeholders in the electricity market from the producer to the end consumer, including the distributor and the supplier. GreenLys was set up by a consortium of partners from the French electricity supply chain all offering complementary expertise - ERDF, GEG, GDF Suez, Schneider Electric and Grenoble INP – and brings together a number of specialists from the field of smart grids - Atos Worldgrid, Cnrs EDDEN , Hespul, CEA-LITEN , Alstom Grid, RAEE and RTE. It benefits from the support of the cities of Lyon and Grenoble. It was selected as part of the first investment programme for the future, following a call for interest by the French Environment and Energy Management Agency (ADEME) in 2009. Its full-scale demonstrator integrates the consumer, decentralised energy facilities (photovoltaic cells and cogeneration plants), electric cars and an intelligent structure based on the use of ERDF Linky smart meters. Two technological platforms are being developed in the urban areas of Lyon and Grenoble. In all, a target of 1,000 residential consumers and 40 commercial buildings are involved in the experiment. This systemic view allows us to understand the potential value of a Smart Grid in its sociological, environmental, economic and technological dimensions. Among the solutions a LV grid which is capable of incorporating decentralised generation installations (based on renewable energy and/or natural gas) and electric cars on a large scale is tested in Lyon Confluence district.

Figure 1 : Confluence district in Lyon

Figure 2: PV installation in Confluence district (1)

LV GRID VOLTAGE ISSUES

Voltage issues due to renewable production can be easily understood by the following simplified formula:

$$\Delta U(\%) \sim \frac{RP + XQ}{U^2}$$

-ΔU (%): voltage variation at the injection point

-R (Ω): resistive upstream resistance at the injection point
-X (Ω): reactance at the injection point
-U (V): nominal voltage at the injection point
-P (W) active power injected or consumed
-Q (VAr) is the reactive power injected or consumed
Local injection of P (by PV sources for instance) provokes a voltage increase. This increase can be locally compensated by a local consumption of P and / or Q. The ideal and simplest solution would be to have a synchronised consumption when local production happens. However, in case of PV panels for instance, production happens during day whereas consumption is more important in evening. The voltage can be also controlled at the substation level by a modification of the transformer ratio. In this case, all the downstream voltage is impacted. The following pictures illustrate the voltage issues at the substation level:

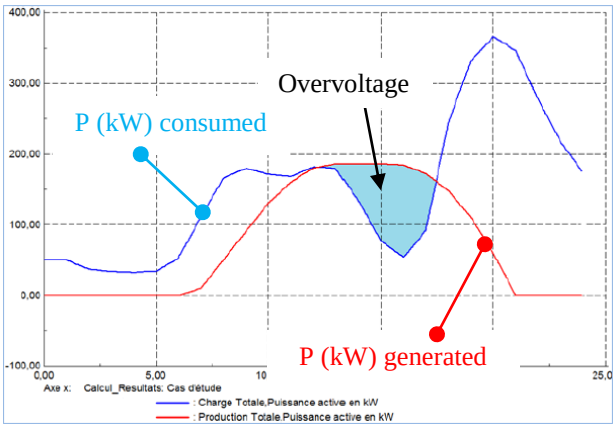

Figure 3 : overvoltage during peak production

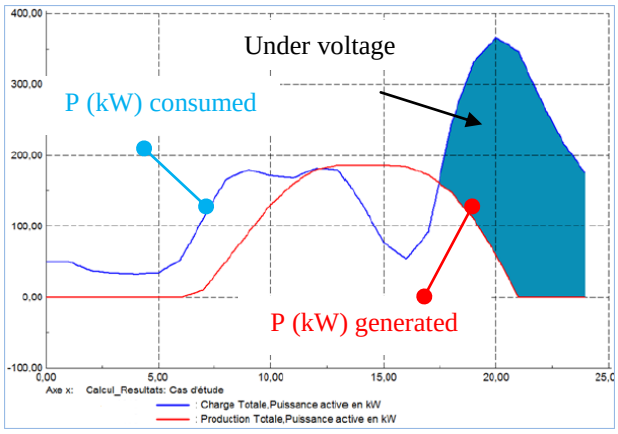

Figure 4 : under voltage during peak consumption

Therefore, a same LV distribution grid customer can in the same day brush against the minimum & maximum voltage limits within the allowed band. The allowed band is defined in France by standard EN50160 [1]. The voltage has to be within the band of 230 V +/- 10%. The figure below shows local injection effects on voltage profile along a real LV feeder: overvoltage occur during specific conditions when maximum production coincides with low local consumption.

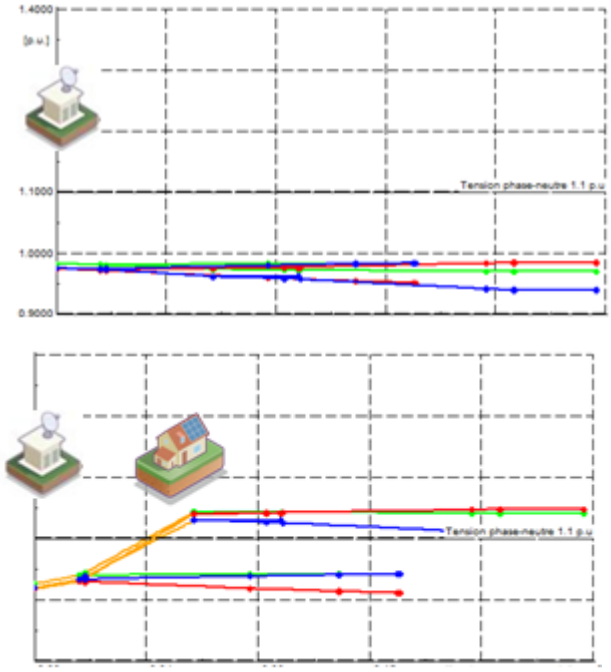

Figure 5 : Voltage profile along a real LV feeder without and with PV

Future and present issues on the French Grid

At the end of September 2014, 4.4 GW of PV were already in operation in France. About 95% of these sites are connected to the distribution grid today.
For planning purpose ERDF, as French main DSO, built several national scenarios of PV development (see ref. [2]). These scenarios anticipate large amount of PV in 2020 and 2030, most of these sites being connected to LV networks.

	2020	2030
Medium scenario	**8 GW**	**18 GW**
PV >250kVA (MV)	29%	28%
PV 36 à 250 kVA (LV)	36%	36%
PV <36kVA (LV)	35%	36%
High scenario	**15 GW**	**25GW**
PV >250kVA (MV)	27%	26%
PV 36 à 250 kVA (LV)	33%	33%
PV <36kVA (LV)	40%	41%

Table 1 : PV development scenarios in France (ref. [2])

Those figures lead to huge technical and economical challenges for distribution network integration:

connection equipments, network reinforcement and network creation (see ref. [2]). Integration costs depend on location of PV sites. The figure below shows 3 different areas depending on maximum PV power at a specific node:

- For low PV penetrations, no reinforcement is needed;
- For high PV penetrations, network reinforcement is the least cost solution even considering smart alternatives;
- For intermediate PV penetrations, smart grid solutions turn out to be economical solution to avoid network reinforcements.

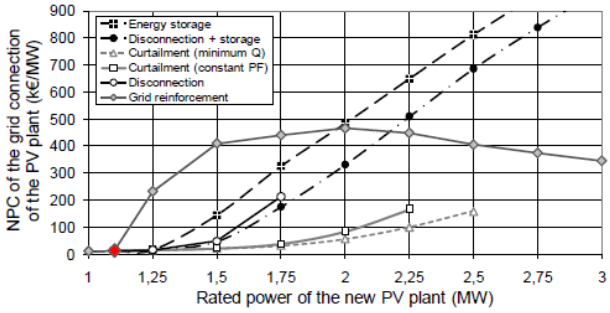

Figure 6 : Example of Net Present Cost of different connection solutions of a PV plant (ref. [3])

Thus, Smart Grid solutions can be alternatives to network reinforcement in some cases. These strong results feed a strong conclusion: DSO need anticipation capabilities to prepare Smart Grids roll-out and provide economical long run optimisation. To perform those predictions, ERDF developed a specific probabilistic tool, based on econometric approach linking current PV development data and LV grids characteristics.

This tool has been used in Greenlys to provide local declinations of several national scenarios. The figure below shows the map resulting for a very high PV development scenario. In this case, PV development triggers technical constraints for about 3% of LV networks, most of them located in the North West area of Lyon (see figure below). Technical simulations indicate that Smart Grids solutions such as Volt-VAr control can be used for 50% of cases.

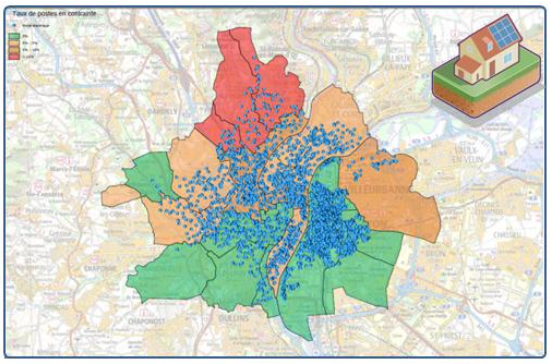

Figure 7 : PV development scenario in 2030 for the Greenlys area in Lyon

ELECTRONIC COMPENSATION

Although the reactive part of the grid compared to resistive part is less important in LV than in HV, electronic reactive compensation has demonstrated interesting results firstable in simulation and then in real experimentation at a second step. The principle consists in injecting or absorbing reactive power when the voltage is below or above the threshold defined by EN 50160

$$\Delta U(\%) \sim \frac{RP + XQ}{U^2}$$

The system called AccuSine is a combination of self's, capacitance and IGBT. The regulation scheme, specifically developed for the GreenLys project, allows the system to work within dead band. It means that it only works whenever the voltage is out of the authorized limits in order to avoid supplementary losses on the grid due to reactive absorption or injection.

Fig. 8: AccuSine

Figure 9: PV panels in Lyon Confluence

The following results show that the voltage variation is limited between +/-8% without AccuSine and between +/-1% with AccuSine.

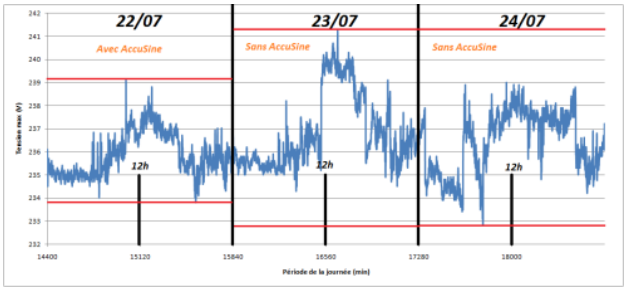

Figure 10: voltage variation with/without AccuSine tested in Lyon Confluence

Thus, electronic compensation using a Q = f(U) with dead band regulation proved to be a powerful tool to control voltage variations in LV networks. One of the strong advantages is fast reaction for fast voltage variations control, thanks to electronic technologies. It is also interesting at the production level as a turnkey mean to produce reactive power whenever the PV inverters don't have this possibility due to technological or economical reasons. Moreover, it can deliver reactive

services upstream to help the DSO to manage congestion issues at MV side. Ultimately this solution facilitates PV integration increasing hosting capacity of LV distribution networks. This solution has yet several limitations. First, reactive compensation, even with dead band regulation, tends to increase line losses during regulation moments (see ref. [3] and [4]). Secondly, positive impacts on hosting capacity strongly depend on local network characteristics and configuration such as network short circuit power and network impedance angle (see ref. [5] and figure below). In some cases, this leverage effect can be limited in some cases. Thus, local settings of electronic compensation have to be constantly adapted to local network configurations.

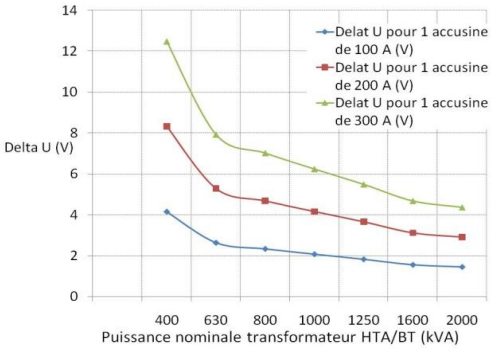

Figure 11: Leverage effect of reactive compensation depending on local network compensation

SMART MV/LV TRANSFORMER

Hardware innovative development

An innovative smart MV/LV transformer has been developed in order to manage the transformation ratio at the substation level. The regulation range has between 5 and 13 taps available (from 1 to 2,5 / tap). The power available is 1000 kVA and the primary voltage is up to 36 kVA. The technology developed has been patented and is compound of 2 active parts. The first one is the conventional transformation device and the second one is called the booster part:

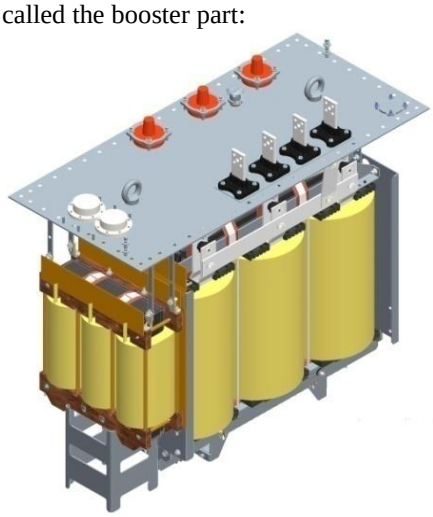

Figure 12 : booster transformer

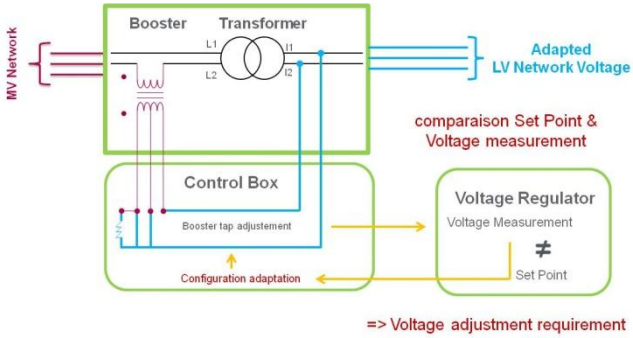

Figure 13 : principle scheme of the booster transformer

The main advantages are no moving mechanical parts within the transformer tank which allows an enhanced reliability a low maintenance. The level off losses is also low.

Smart regulation

Many strategies of regulation are possible [6]. The regulation principle selected is described below

COMBINATION OF SMART MV/LV TRANSFORMER & ELECTRONIC COMPENSATION

The architecture developed for GreenLys is represented on the following picture:

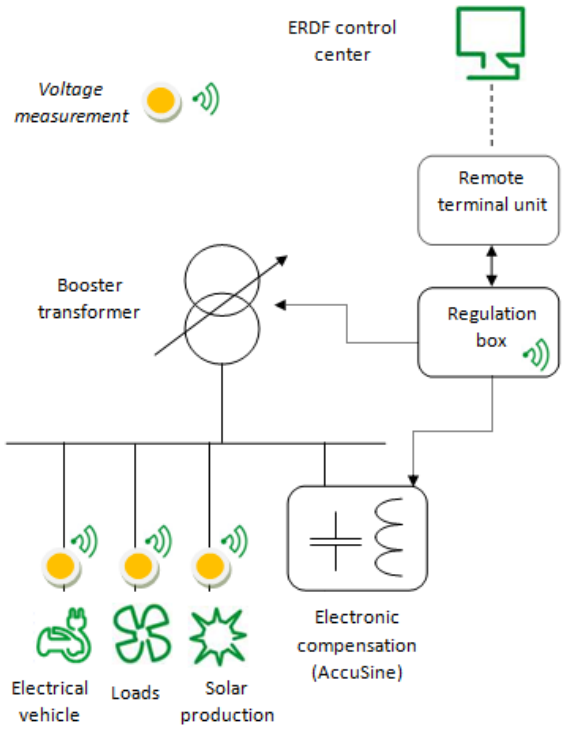

Figure 14: Volt VAr control solution developed in GreenLys

This architecture has been specifically designed in Greenlys to achieve 3 main functionalities:

- Global voltage control for a given LV network compensating local variations due to consumption and production behaviours and upstream voltage disturbances;
- Reactive power support service for MV side centralized voltage regulation;
- Ancillary services to provide System value.

This architecture relies on local distribution grid leverages (reactive power and voltage settings) without requesting active power curtailment at this stage. Indeed, active power management is a global System issue asking for coordination between several stakeholders. In this context, ERDF policy is neutral market facilitation (see ref. [7]).

In this architecture, the voltage measurement is made at the end users and producers level. Indeed, the EN50160 requirements have to be respected at the voltage delivered to the grid customers and not only at the substation level.

The voltage measurements are sent to the voltage regulation box with a wireless communication system. The regulation box algorithm manages the booster transformer and the reactive electronic device in order to deliver the most adapted voltage to the LV grid. A connexion is made with the ERDF control centre in order to control the system and to manage reactive services to the upstream distribution grid.

This solution is currently being installed in Greenlys area in Lyon. Further work will present the results of this experiment.

CONCLUSION

More and more decentralized energy resources at the LV grid level, especially PV production, cause voltage disturbances. In order to solve this, two complementary means of voltage regulation have been developed and tested in the framework of the GreenLys project. The first one called AccuSine in an electronic solution and has already been tested in Lyon Confluence. This solution demonstrated interesting results on LV side. Thanks to electronic technologies, time reaction is very fast; this solution is also interesting at the production level as a turnkey mean to produce reactive power. Moreover, it can deliver reactive services upstream to help the DSO to manage congestion issues at the MV side. Ultimately this solution facilitates PV integration increasing hosting capacity of LV distribution networks. A complementary innovative solution called booster transformer has been developed. This solution will enable voltage regulation at the secondary substation level. A global architecture including AccuSine, booster transformer and remote voltage sensors has been designed. This solution is currently being installed in Greenlys area in Lyon. Further work will present the results of the final experiment.

ACKNOWLEDGMENTS

We warmly thank the ADEME and the Future Investment Program for the support and funding of smart grid projects. We sincerely thank the cities of Lyon and Grenoble for their involvement and motivation in our joint projects. Special thanks to all the partners working with us in the GreenLys consortium.

.

REFERENCES

[1] EN50160 standard: February 2011, Voltage Characteristics of Public Distribution Systems

[2] Antoine MINAUD et al., 2013, "Analysis of the options to reduce the integration costs of renewable generation in the distribution networks. Part 1: impact of PV development in France and global analysis of considered alternatives to reinforcement", *CIRED Conference in Stockholm*, ref paper 1178.

[3] Gauthier DELILLE et al., 2013, "Analysis of the options to reduce the integration costs of renewable generation in the distribution networks. Part 2: a step towards advanced connection studies taking into account the alternatives to grid reinforcement", *CIRED Conference in Stockholm*, ref paper 1356.

[4] Alberto PAGNETTI et al., 2014, "Probabilistic methods moving towards the field: a tool for DG connection studies featuring the alternatives to grid reinforcement", *CIRED Workshop in Rome*, ref paper 0188.

[5] Thomas DEGNER et al., 2011, "Photovoltaic-System hosting capacity of Low Voltage distribution networks", Fraunhofer Institute.

[6] Yves CHOLLOT Schneider Electric, Christophe LEBOSSE ERDF, 2015, *NEW APPROACH TO REGULATE LOW VOLTAGE DISTRIBUTION NETWORK*, Lyon, France, ref paper 1145.

[7] Guillaume ROUPIOZ et al., 2015, "Flexibility Market Facilitation through DSO Aggregator Portal", *CIRED Conference in Lyon*, ref paper 1306.