IMPACT ANALYSIS ON VOLTAGE UNBALANCE OF PLUG-IN ELECTRIC VEHICLE HOME CHARGING IN THAILAND DISTRIBUTION SYSTEM

Thongchai KLAYKLUENG
Kasetsart University - Thailand
thongchai.ky@rmuti.ac.th

Sanchai DECHANUPAPRITTHA
Kasetsart University - Thailand
fengcdt@ku.ac.th

ABSTRACT

This paper proposes an impact analysis on voltage unbalance of Plug-in Electric Vehicle (PEV) home charging in Thailand distribution system. The voltage unbalance is calculated with the voltage unbalance factor (%VUF) according to IEC 61000-2-4: 2000-06 standards and impact assessment with the new criteria of Provincial Electricity Authority (PEA) standards. The study uses distribution network data of large cities in Thailand. A model of distribution network has been developed based on the DIgSILENT PowerFactory with DIgSILENT Programming Language (DPL). The assignment of PEV to each node and the number of PEV to each phase is performed by Monte Carlo method. Charging scenarios focus on overlaps of charging periods in each phase. PEV charging duration is about 6 hours. Simulation case studies of PEV single phase charging with point of charge far from substation are carried out for 5 cases. They are average point of charge, Max to Min charge, Min to Max charge, Central of the feeder charge, and Random point charge. Simulation results show that PEV single phase charging raises the voltage unbalance factor (%VUF), when there are overlapping charging time periods. A significant of the %VUF increases gradually along the length of feeder and has maximum value at the end of the feeder. Moreover, many case studies show %VUF exceeding criterion of 2.0% of the PEA standards.

INTRODUCTION

Plug-in Electric vehicle (PEV) will play an important role in urban areas, and is thus expected to increase in number. The charging of PEVs is a new challenge to distribution networks. The possible impact has recently come to the attention of utility. The PEV single phase charging at home impacts distribution system, such as increased demand, more complex load forecast, and power quality problems such as voltage unbalanced. In 2013, Provincial Electricity Authority of Thailand (PEA) prepared a new planning criterion for development of the distribution network in large cities of Thailand, preparing network for future smart grid environment.

In three phase power system the generated voltages are sinusoidal and equal in magnitude, with individual phases 120° apart. But the result of power system voltage at the distribution system and end user can be unbalance for several reasons. Typically, an unbalance is caused by unbalanced single-phase loads in the distribution system. As the result, the magnitude and phase angle of voltage change. The lighting load is one of distribution system unbalanced load. Other causes to voltage unbalance are asymmetrical transformer winding impedances, transmission impedances and single phase tripping on three phase system [1].

Plug-in electric vehicle (PEV) connects the single phase charging to smart grid system. It can be new cause of power system voltage unbalance. Power distribution utilities in Thailand as Metropolitan Electricity Authority (MEA) and Provincial Electricity Authority (PEA) are concerned. It can be seen from the pilot projects such as MEA-PEV charging station in 2012 and PEA-PEV quick charging station in 2013. The voltage unbalance will cause of power system losses and heating effects. It has affected to equipments, such as power electronic converters and adjustable speed drives (ASDs). Induction motor with current unbalance has higher temperatures, Speed reduced, torque ripple, performance and shorten its lifespan [2].

This paper therefore proposed of Impact analysis on voltage unbalance of plug-in electric vehicle home charging in Thailand distribution system. The voltage unbalance is calculated with the voltage unbalance factor (%VUF) according to IEC standard and impact assessment with the Thailand distribution system standard. (PEA's big cities power system planning criteria 2013) [4].

ELECTRIC VEHICLE

Up to now, there have been problems related to energy crisis, environmental impacts from petroleum based transportation vehicles, oil prices [5]. They may lead to alternative vehicles such as a Hybrid or Plug-in Hybrid Electric Vehicle (HEV/PHEV) or Plug-in Electric Vehicle (PEV). This is because these vehicles have low impacts on environment, silent and high efficiency compared to conventional vehicles. The Electric Power Research Institute (EPRI) predicted that electric power needed for electric vehicles should be as high as 20% of total world power demands in 2050. A market trends, plan production and sales of electric vehicles should be also increased [6]. Moreover, with more advanced smart control and smart energy management, these vehicles could also be able to deliver stored energy to a power distribution system, known as "vehicle-to-grid mode" (V2G). This is because of the expected scenario that

typical electric vehicles could normally spend 4% of energy for driving but could reserve up to 96% for the next trip [6-7].

In Thailand, PEV should play an important role in urban in the next decade [5]. Therefore, electrical charging stations could become the most important part of the PEV systems. For example, the charging stations installed at home, shopping centers, office or service charging station facilities. These could cause significant impacts on the distribution networks such as electric energy demand increases, power quality problems, and load forecasting becomes more complex. Furthermore, this application may possibly cause power outages in some areas [8]. So that it is necessary to study and design suitable power systems for PEV charging application.

BATTERY AND CHARGING

There are several types of PEV batteries currently used, which would be Lithium alloy / high-voltage positive, Lithium-Sulphur, Lithium-Metal or Lithium-ion polymer batteries. However, Lithium batteries are the most popular types of batteries [6]. This is because these battery types are appropriate to be used for both conventional and specific energy application. However, the cost of Lithium batteries is relatively high. The battery charging method can be divided into 3 levels based on the US standards and 4 modes based on the IEC standards. These are dependent on the amount of charging power, voltage level and charging time [8-9].

VOLTAGE UNBALANCE FACTOR

According to IEC 61000-2-4: 2000-06 standard is defined the percentage voltage unbalance factor (%VUF) on distribution system not to exceeded 2% and have to consider in long-term effects that have duration more than 10 minutes [8]. It can be calculated as following.

$$\%VUF = \left(\frac{V_N}{V_P}\right)\times 100 \qquad (1)$$

$$\begin{bmatrix} V_0 \\ V_P \\ V_N \end{bmatrix} = \frac{1}{3}\begin{bmatrix} 1 & 1 & 1 \\ 1 & a & a^2 \\ 1 & a^2 & a \end{bmatrix}\begin{bmatrix} V_a \\ V_b \\ V_c \end{bmatrix} \qquad (2)$$

When;

$\%VUF$	Voltage unbalance factor.	(%)
V_P	Positive sequence voltage	(V)
V_N	Negative sequence voltage	(V)
V_o	Zero sequence voltage	(V)
V_a, V_b, V_c	Line - Line voltage	(V)

$a = 1\angle 120°$, $a^2 = 1\angle 240°$.

SIMULATION FRAMEWORK

This paper employs the data of Hua-Hin 3 substation (HUC), and chooses its feeder 4 as a case study. It supplies Hua Hin city area. This city is one of the 12 cities that PEA has selected as pilot cities to upgrade their systems. Moreover, it is a popular tourist location and economically important city of Thailand. In the Fig.1, the distribution network case study is depicted with feeder length of 22.35 km, maximum power demand of 7 MW based on power factor of 0.9 lagging, serving 4,500 customers. And, load points can be grouped for simulation study into 13 nodes [10].

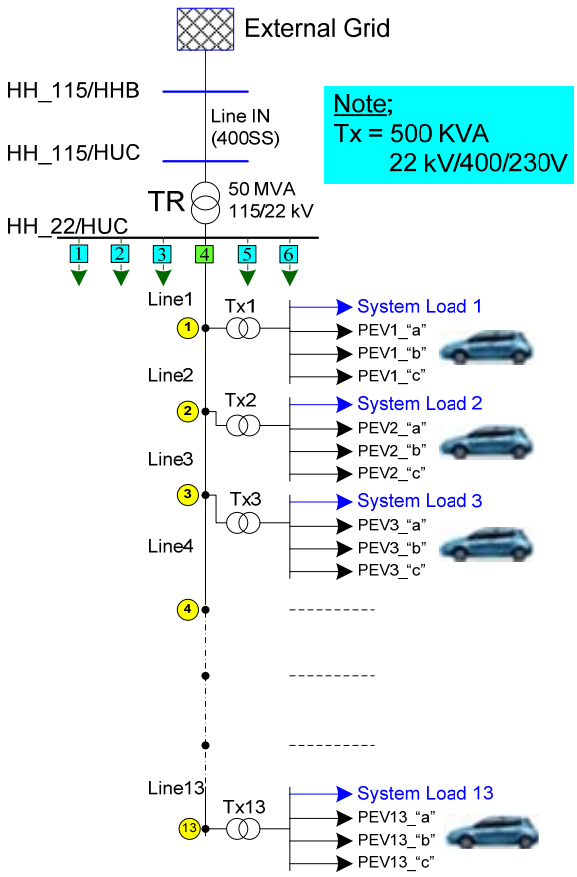

Fig. 1. Distribution network 13 node test feeder

Monte Carlo method is used to generate the amount of charging power of all PEVs at each node and phase for all case studies. The concept of Monte Carlo method can be divided into 6 steps as listed below.

Step 1: Initial condition for Monte Carlo method for the following parameters

- Total node in distribution network case study
- Total PEV
- Total PEV per phase
- Maximum and minimum of PEVs per node

Step 2: Execute Monte Carlo method process 1; random the number of PEV charging at each node
Step 3: Update the number of PEVs for each node

- Number of PEV node1, node2,..., node13

Step 4: Execute Monte Carlo method process 2; random the number of PEV charging at each phase
Step 5: Update the number of PEVs for each phase

- Number of PEV charging phase "a", "b", or "c" at node1, node2,..., node13

Step 6: Obtained the number of PEVs for each node and phase

CASE STUDIES

This paper uses Monte Carlo method for randomly generating patterns for PEV charging for the simulations. The simulation study is divided in to 5 case studies as listed below.

- Case 1 is the condition of uniform power distribution along the feeder (Average point of charge)
- Case 2 is when testing nearby the substation (Max to Min charge)
- Case 3 is when testing at the end of the feeder (Min to Max charge)
- Case 4 is when testing at the middle of the feeder (Central of the feeder charge)
- Case 5 is when testing at random charging (Random point of charge)

All case studies are compared to the base case (without PEV charging). The duration of PEV charging time: Phase "a" at 16.00 – 22.00, Phase "b" at 17.00 – 23.00, and Phase "c" at 18.00 – 24.00 as shown in Fig. 2, and daily power consumption as shown in Fig.3. Parameters in the pilot project of PEV charging stations proposed in [10] were used when testing with a Nissan Leaf PEV, 24 kW-hr Lithium-Ion battery. The model is charged from single-phase distribution system of 230V 50Hz, and power of charger is 3.5 kW. Then put that information to model and simulation testing with DIgSILENT Power Factory with DIgSILENT Programming Language (DPL) scripts for load flow calculations and evaluating with the PEA standards.

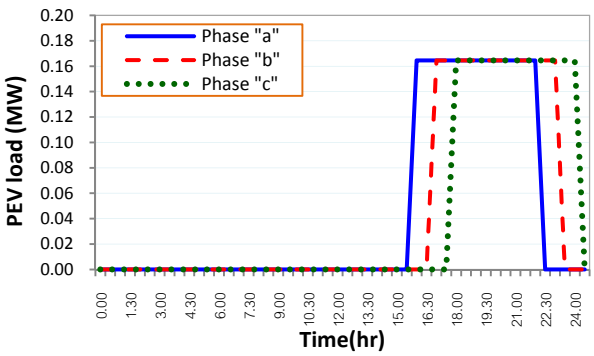

Fig. 2. PEV charging profile at each node

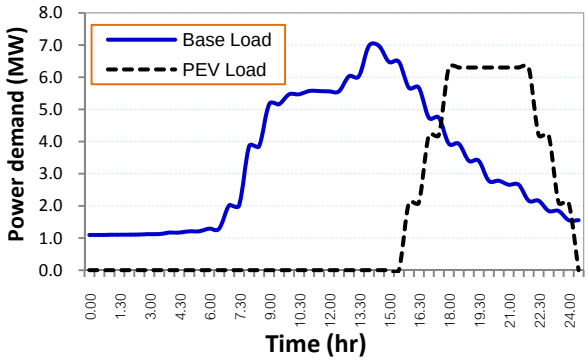

Fig. 3. Power consumptions

SIMULATION RESULTS

Simulation results are shown in Fig.4; %VUF at each node has increased with different cases. The maximum of the %VUF occurs at Node 13, and Case-3 has maximum voltage unbalance. Considering the level of voltage unbalance compared to the PEA standard of 2.0%, Case-1, Case-3, Case-4 and Case-5 are found higher than the standard from node 7 to node 13. But in Case-2, the voltage unbalance is lower than the PEA standard at all nodes because all PEVs have charged nearby to the substation. However, at the high voltage side of the transformer at node HH_115kV/HUC, the %UVF is of less than 0.5%.

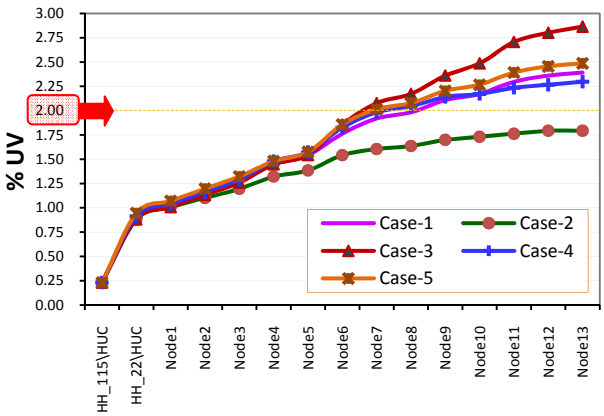

Fig. 4. Voltage unbalance factor (%VUF)

Considering the time duration of charge that cause %VUF, the results shown in Fig.5; Case-3 has maximum of the %VUF, and Case-2 has minimum of the %VUF. The voltage unbalance is significantly occurred during the charge at the same time. All case studies, after PEV charge completed all phases (18.00-22.00) the voltage unbalances are still occurred, however there are less because PEVs charging at each phase of each node are different from Monte Carlo method.

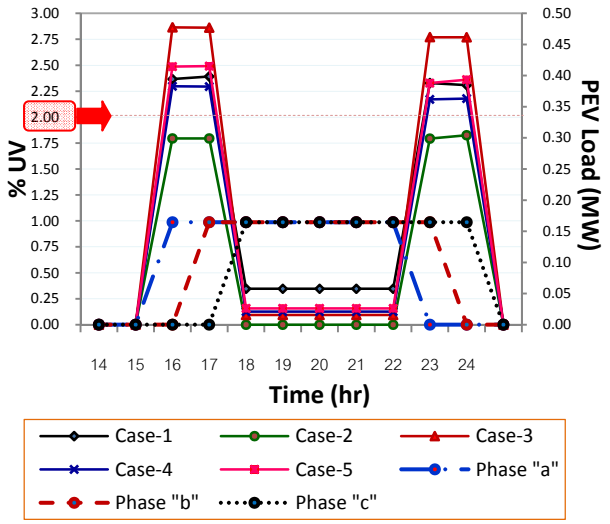

Fig. 5. Voltage unbalance at Node 13

CONCLUSIONS

The simulation model of the distribution network with 13 testing nodes is used, where power from the network is used to supply the PEV charging. The PEV loads using Monte Carlo random consists of 5 case studies for making a number of charging PEVs at each node and each phase. The charging time duration (16.00 to 24.00) is set to be different for each phase. The simulation results show that the %VUF at each node. The maximum value of the %VUF has occurs at Node 13, and Case-3(Min to Max charge) has maximum voltage unbalance. According to the PEA standard of 2.0%, Case-1, Case-3, Case-4 and Case-5 are higher than the PEA standard from node 7 to node 13. Case-2 is lower than the PEA standard at all nodes because all PEVs have charged nearby to HUC substation. A significant of the %VUF are increase continuously along of the distribution feeder length as shown in Fig.6.

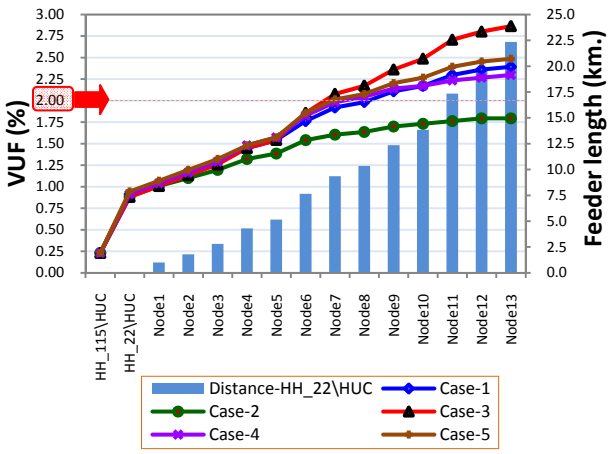

Fig. 6. Voltage unbalance and Feeder length

The voltages unbalance has more impact to customers at the end of the feeder all case studies. Therefore, PEA that oversees the distribution system, it is necessary to plan and improve system for strong, capable of PEV charging in the future smart grid system.

ACKNOWLEDGMENTS

Authors would like to thank the Ministry of Science and Technology for research supported.

REFERENCES

[1] Annette von Jouanne and Basudeb (Ben) Banerjee, 2001, “Assessment of Voltage Unbalance”, IEEE TRANSACTIONS ON POWER DELIVERY, VOL.16, NO.4, OCTOBER, pp. 782-790.

[2] E. C. Quispe, X. M. López-Fernández, A. M. S. Mendes, A. J. Marques Cardoso, Senior and J. A. Palacios, 2011, “Experimental Study of the Effect of Positive Sequence Voltage on the Derating of Induction Motors under Voltage Unbalance,” IEEE International Electric Machines & Drives Conference (IEMDC), pp. 908-912.

[3] Farhad Shahnia , Arindam Ghosh, Gerard Ledwich and Firuz Zare, 2013, “Predicting Voltage Unbalance Impacts of Plug-in Electric Vehicles Penetration in Residential Low-voltage Distribution Networks”, Electric Power Components and Systems, Taylor & Francis Group, LLC, Published online, P1594– 1616.

[4] Electrical Engineering Kasetsart University, 2013, “Final Project report: Feasibility study for the development of the power system in the big cities,” PEA, (in Thai).

[5] P.Prakornchai and L.Nopbhorn, 2012, “Development of Fast Charging Station for Thailand”, International Journal of Innovation, Management and Technology, Vol. 3, No. 6, pp. 668-674.

[6] International Energy Agency (IEA), 2011, “Technology Roadmap Electric and plug-in hybrid electric vehicles,” June 2011.

[7] W. Kempton and J. Tomic, 2005, “Vehicle-to-grid power Fundamentals: Calculating capacity and net revenue”, J. Power Sources, pp. 268–279, Jun 2005.

[8] T. klayklueng and S. Dechanupaprittha, 2013, “Impact Analysis of EVs Charging in Low Voltage System using DIgSILENT,” EECON-36, 11-13 Dec, 2013. (in Thai).

[9] IEC 61000-2-4 : 2000-06, Electromagnetic compatibility (EMC) Part 2-4: Environment Compatibility levels in industrial plants for low-frequency conducted disturbances.

[10] P. Kongthong and S. Dechanupaprittha, 2013, “Impact of Unbalance Electric Vehicle Home Charging in Distribution System,” EECON-36, 11-13 Dec, 2013. (in Thai).