RELIABILITY IMPROVEMENT BY OPTIMIZING HV/MV SUBSTATION CONFIGURATION IN COMBINATION WITH REMOTE CONTROLLED SWITCHES

Edward COSTER
Stedin, TU Eindhoven – the Netherlands
edward.coster@stedin.net

Dirk BOENDER
Stedin – the Netherlands
dirk.boender@stedin.net

Bram STAARINK
TU Eindhoven – the Netherlands
bram.staarink@gmail.com

ABSTRACT

This paper shows the significance of combining HV/MV substation configuration, distribution network restructuring and incorporating remote controlled switching on improving system reliability. A case study is used for the reliability assessment. Stedin decided to install new MV switchgear in HV/MV substations in two redundant sections placed in separate rooms. This decision leads to restructuring of the studied distribution grid, mostly by optimizing the feeding infrastructure of the MV distribution grid. Different substation configurations are assessed, resulting in comparable reliability indices for both the two-sections double busbar and the two-sections single busbar configuration, making the single busbar configuration favorable because this configuration is less expensive. Incorporating these adjustments increases total system reliability and makes distribution grid design more straightforward. Restructuring the MV grid distribution has the largest contribution in increasing system reliability. Final step is including remote controlled switching in the distribution network at the open-points, inside new-build satellite switching stations and at strategic points halfway each feeder. All these improvements reduce system average interruption duration with more than 55% per year for the considered case study.

Keywords: busbar concepts, distribution automation, reliability, substation configuration

INTRODUCTION

People depend on electricity. This dependency of the modern society on electric energy is considerable and increasing rapidly. Interruption of power supply can cause great discomfort and may lead to serious economic damage. Because of this, the electricity grid has to be of high quality and assure high availability. At the same time grid operators are being faced with a decrease of income which leads to a pressure on costs. Consequently it becomes very important to justify all expenditures by proving that it either prevents a large expenditure in the future or is an efficient way to ensure the required level of quality. Reliability of supply is an important business value of distribution system operator (DSO) Stedin (Rotterdam, the Netherlands). An important measure for this ambition is the standardization of assets, grid topology and substation configurations. The upcoming replacement wave of aging switchgear, where the pending end of support by the manufacturer poses an unacceptable risk, gives DSO Stedin the opportunity to re-evaluate their current substation configuration design and simultaneously explore possibilities for integrating distribution automation into their grids [1].

Problem definition

Many HV/MV substations in the service area of Stedin have been built between the years 1960 and 1980 and will be replaced in the next decades. The re-evaluation of the substation configurations has led to a new standard substation configuration policy. Based on past experience and a multi criteria analysis carried out within Stedin, it has been concluded that it is preferable to have the switchgear divided into two redundant sections which are placed in separate rooms. Details of this analysis can be found in [2]. Question is what substation configuration fits best for both technical and economic reasons. To answer this question, in this paper various substation configurations will be evaluated. This will be done in a case study where upcoming replacement of the MV part of the HV/MV-substation and the existing distribution grid of Gorinchem are considered.

This case study gives the opportunity to discuss the current and the new possible substation configurations as well as the adaptions to the current distribution grid. The substation configurations and the distribution grid adaptions will be evaluated via reliability calculations. Within Stedin both customer interruption time and frequency should be as low as possible at reasonable costs. On substation level this is done by optimizing the substation configuration for the feeding infrastructure of the distribution grid. On distribution grid level optimizations are carried out by removing and replacing aged satellite switching stations and transforming complicated meshed network structures into radially operated ring structures. Further possible reliability improvements can be achieved via Remote Controlled Switches (RCS). The final part of this paper discusses the impact remote controlled switches might have on reliability improvements when these RCS are located on strategic points in the distribution network.

Reliability indicators

Several indicators for measuring reliability of supply exist. In this paper the System Average Interruption Frequency Index (SAIFI), System Average Interruption Duration Index (SAIDI) and Customer Average

Interruption Duration Index (CAIDI) are used. These are calculated as follows:

$$SAIFI = \frac{total\ number\ of\ customer\ interruptions}{total\ number\ of\ customers\ served}$$

$$SAIDI = \frac{\sum customer\ hours\ of\ unavailability}{total\ number\ of\ customers\ served}$$

$$CAIDI = \frac{\sum customer\ hours\ of\ unavailability}{total\ number\ of\ customer\ interruptions}$$

The development of SAIFI and SAIDI values in the Netherlands over the last ten years show that the MV distribution network has large contributions to both indices. For SAIDI this is depicted in **Figure 1** where the red bars represent the contribution coming from the MV distribution grid [4].

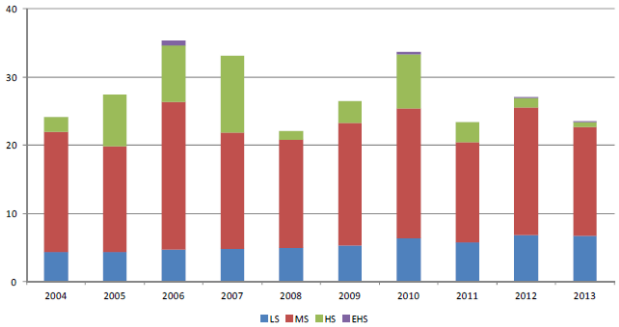

Figure 1: *Development of SAIDI in the Netherlands (minutes per year) [4]*

These figures justify to study the reliability indices of MV-grids in the grid planning phase to come up with a solution which fits best both from economical and technical point of view.

RESEARCH OBJECTIVES AND APPROACH

The research objectives discussed in this paper are:

- Define and evaluate improvements on the distribution network to increase reliability and compatibility.
- Evaluate the MV switchgear configuration of HV/MV substation Gorinchem with respect to reliability and availability of the distribution network based on the standard defined substation configurations.
- Define an evaluation method to determine strategic locations for implementation of distribution automation to further improve availability in the distribution network.

The reliability assessments are done within a software package in which the distribution grid in the Gorinchem area is modeled including the various MV-substation configurations. To frame the research, several assumptions are made for doing the reliability calculations. These assumptions are:

- Components included in the reliability assessment: the HV grid, HV/MV transformers, MV busbars including all MV isolators and circuit breakers located in the MV-bays, Ring Main Units (RMU) and MV cables. The LV grid is excluded in the calculations.
- Protection devices are considered to be 100% reliable and selective.
- The switches in the distribution network have an average manual actuation time of 30 minutes due to travelling and local operation of RMU's. Remote controlled switches have an actuation time of 3 minutes.
- Only first order contingencies are considered.
- The number of customers connected to a Ring Main Unit is estimated using power consumption data

CASE STUDY

The existing MV distribution grid in Gorinchem is used as a case study. As discussed earlier a multi-criteria analysis performed within Stedin has shown that it is preferable to divide the switchgear into two redundant sections and install them in separate rooms [3]. This has been taken as a basic design rule for substation planning. In order to secure redundancy in the distribution grid the distribution feeders has to start at one busbar section and end at the other busbar section. Hence as a consequence of this design rule some distribution feeders in the distribution grid of Gorinchem have to be adapted to meet this requirement.

Distribution grid adaptions

The decision to install new switchgear in two separate sections leads to restructuring of the current distribution grid because the current distribution grid does not comply with the redundancy conditions. Parallel to that, some ongoing projects in the distribution network are incorporated in the model to determine their impact on reliability of the distribution grid. Other restructuring is done by e.g. removing and replacing aged satellite switching stations to create radially operated ring structures. These structures can be protected by simple protection systems, can have a fast fault localization and makes the network ready for distribution automation. A simplified structure of the initial MV busbar arrangement and distribution network is shown in **Figure 2**. In this figure the distribution network is divided into several areas named after the predominant consumer type in each area: Agr. (agricultural), Pub. (public) and Ind. (industrial).

After distribution network restructuring the Gorinchem network can be schematically viewed as in **Figure 3**. Both Pub3 and Pub4 areas now have redundant feeder cables to the substation and both satellite switching stations in these areas are completely renewed, including remote controlled switchgear.

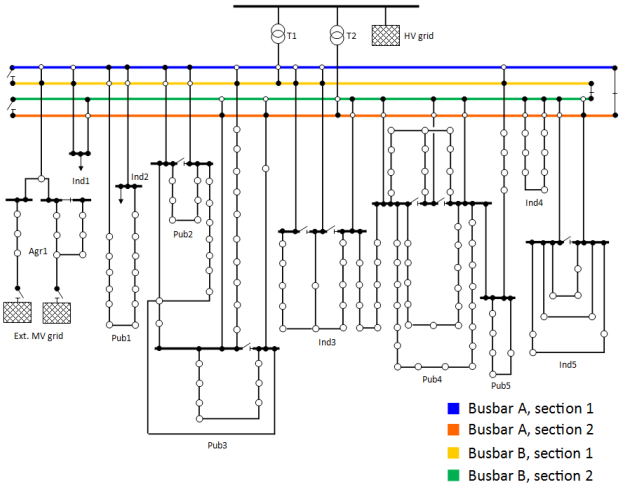

Figure 2: *Current distribution grid of Gorinchem including the current DBB substation configuration*

The satellite switching station in the Ind5 area has become superfluous hence it is removed. The Ind5 area is restructured to a radially operated ring. In the Pub5 area the switching station is removed and two direct feeders to the substation are created. The Ind3 area contained aged switchgear hence it is optimized by removing the satellite switching station. Three radially operated feeders are created where the right cable is able to back-up both other cables in case of a section 1 failure. After completion of the restructuring the distribution grid is in compliance with the design rule for substation planning.

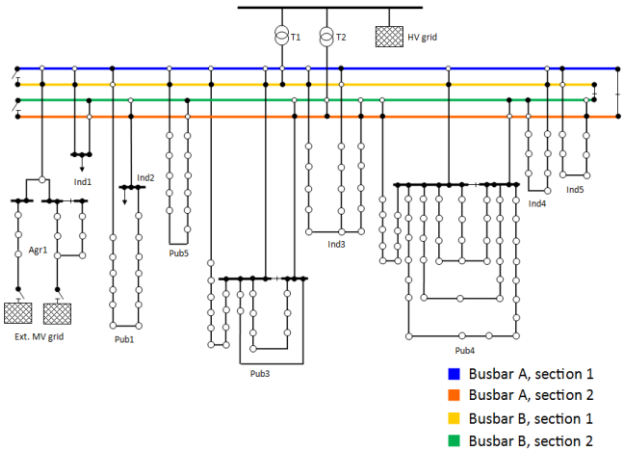

Figure 3: *Restructured status of the Gorinchem network, including DBB substation configuration*

Substation configuration

With the aid of the distribution grid model including all adaptations various substation configurations are evaluated. The proposed MV switchgear configurations are:

- Single Bus Bar Single Section (SBBSS)
- two-sections Single Bus Bar (SBB)
- two-sections Double Bus Bar (DBB).

Initially, the current substation configuration of Gorinchem has a DBB configuration. In order to be able to make a detailed comparison of the impact of substation configurations and of the distribution grid adaptions on the reliability figures four detailed models are created and evaluated. The four assessment cases treated in this paper are enumerated as follows:

1. Reference case, no changes made to both the current substation configuration and current distribution network. The substation is configured as two-sections double busbar combined including the current distribution network.
2. Substation configured as two-sections double busbar combined with the restructured distribution network.
3. Substation configured as two-sections single busbar combined with the restructured distribution network.
4. Substation configured as one-section single busbar combined with the restructured distribution network.

For the reliability calculations the following indices are incorporated in the model which are shown in table 1.

Table 1: *Reliability indices*

Network component	λ [1/a]	μ [h]
HV Grid	0,1	N.A.
HV/MV transformer	0,02	84
MV BusBar section (SBB/DBB)	0,0004	48
MV busbar section (SSSBB)	0,0008	48
MV cable XLPE type*	0,015/km	48
MV cable GPLK type*	0,020/km	48
Ring Main Unit	0,0006	60

*including cable joints and terminations

Based on reliability indices the different busbar configurations are rated.

Distribution automation

Final step is implementation of distribution automation. In this paper the focus is on Remote Controlled Switches (RCS). As indicated in **Figure 4**, a Remote Controlled Switch contains a remote fault passage indicator in order to have a quick indication of the location of the faulted component in the control center. The switch can be remote controlled by an operator in the control center. The need to perform switching operations manually is reduced (or even eliminated) and this results in a positive effect on system availability due to reducing traveling and localization time. Hence it has a positive impact on CAIDI and SAIDI indices. Three concepts of remote controlled switching are evaluated. In the distribution network restructuration phase, both the satellite switching stations in the Pub3 and Pub4 area are already equipped with remote controlled switchgear, this is included in the reference case. The following concepts are considered:

1. Reference case. HV/MV substation is fully equipped with remote controlled switches, even as both replaced satellite switching stations. All other switching operations in the distribution network are done manually.
2. Remote controlled normally open-points. As concept 1, but in addition all normally open-points in the distribution network are remote controlled.
3. Remote controlled disconnectors. As in concept 2, in addition remote controlled switches are modeled in selected ring main units. This case is subdivided into three parts:
   - 3a :contains one extra RCS per feeder
   - 3b :contains two extra RCS per feeder
   - 3c :all switches in the distribution network are remote controlled.

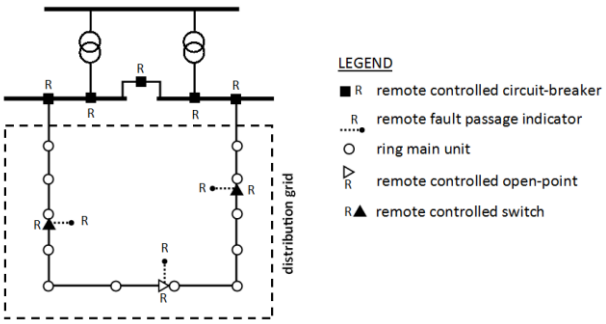

Figure 4: *Example of implementation of three remote controlled switches in a distribution ring*

RESULTS

The results of the reliability assessment of the restructured distribution grid in combination with the three evaluated substation configurations are shown in table 2.

Table 2: *Results of the reliability evaluation*

Index	Case 1: Reference	Case 2: DBB	Case 3: SBB	Case 4: SBBSS
SAIFI [1/a]	0,24	0,22	0,20	0,22
SAIDI [h/yr]	0,27	0,19	0,18	0,21
CAIDI [h]	1,14	0,85	0,89	0,96

The reliability study makes clear that both the two-sections double busbar and two-section single busbar configuration score best. From these results it can be concluded that having a busbar divided in two sections in separate rooms lead to a robust feeding infrastructure. The performance difference of SBB or DBB configurations is from viewpoint of reliability and availability very small. Taking the purchase costs into account it can be concluded that the SBB configuration is the most cost-effective alternative for MV substation replacement. The small differences between Case 2 and Case 3 also shows that the reliability and availability of the distribution grid is mainly determined by the performance of the grid itself rather than by the substation configuration. These results, in Gorinchem with a mixed Pub./Ind./Agr. load, are similar to the results in [2] for a HV/MV substation with Pub. loads only. In figure 5 the proposed substation configuration including the adapted distribution grid is shown.

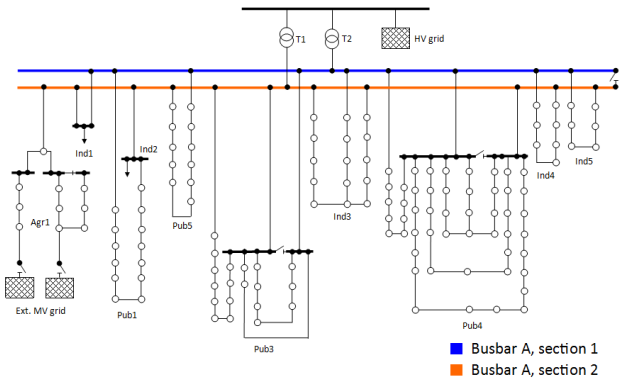

Figure 5: *Proposed configuration of the substation configuration of the distribution grid of Gorinchem*

The results on distribution automation are shown by comparison of SAIDI indices, because remote controlled switches only accelerate the fault localization and decrease restoration duration while the SAIFI remains unchanged. In RCS concept 3 a distinction is made between the amounts of RCS placed in a feeder. The analyzed options are one single RCS per feeder (3a), two RCS per feeder (3b) and a fully remote controlled network (3c). Table 3 shows the results on system level:

Table 3: *Results of the distributed automation concepts*

Index	Concept 1: refe-rence	Concept 2: RCS at open-points	Concept 3a: one extra RCS	Concept 3b: two extra RCS	Concept 3c: all RCS
SAIDI [h/yr]	0,18	0,14	0,12	0,11	0,10

It can be seen that the more RCS are introduced in the network, the impact is increasing, but the additional reliability benefit per additionally RCS is saturating quickly. This result is supported by the results obtained in [3]. For the Gorinchem distribution network, with a maximum of about 10 ring main units per open ring feeder, the highest quantitative impact is obtained by placing a RCS at the open-points in the distribution network and eventually placing one extra RCS halfway each feeder (concepts 2 and 3a).

CONCLUSIONS

In this paper the impact of substation configurations on the reliability of distribution grids is evaluated. Therefore a practical case study on the distribution grid of Gorinchem is performed. It can be concluded that the substation configuration only has a little impact on the reliability indices. Comparing the results of the single and double busbar configuration show that the single busbar configuration performs slightly better. Because of this small difference it is cost-effective to apply a single busbar configuration.

Comparing the single section single busbar configuration with the two section options indicates that two section in separate rooms approach is a valid design rule in substation planning. Furthermore it can be concluded that due to the small differences in the results the majority of the contribution to the reliability indices comes from the distribution grid itself. A prerequisite is that the distribution grid is adapted such that it can be divided over two sections in order to meet the reduncancy requirements.

In this paper it is also demonstrated that the application of remote controlled switches has a positive impact on the overall SAIDI figures. It can be concluded largest reduction in SAIDI is obtained by automating the normally open points. A further reduction can be acquired by automating a switch in the middle of a feeder. Automating more switches will lead to an increase in costs but the contribution to the SAIDI reduction will decline quickly.

REFERENCES

[1] H. Picard, D. Boender, 2013, "Risk management of ageing assets: minimum oil breakers", *CIRED, The 22nd International Conference on Electricity Distribution*, Stockholm Sweden

[2] E.J. Coster and D. Boender, 2014, "Standardisation of MV substation configurations in HV/MV substations", *Cigré B3.*

[3] O. Schroedel, M. Schwan, S. Koeppe and R. Rosenberger, 2011, "Distribution automation solutions - impact on system availability in distribution networks," *CIRED, The 21st International Conference on Electricity Distribution*. Frankfurt, Germany

[4] T. Bogaert, L. Derksen and H. Wolse, 2014, "Betrouwbaarheid van elektriciteitsnetten in Nederland, resultaten 2013", A project of Netbeheer Nederland (in Dutch).