STATE ESTIMATION IN LOW VOLTAGE GRIDS BASED ON SMART METER DATA AND PHOTOVOLTAIC-FEED-IN-FORECAST

Dominik WAERESCH,
Robert BRANDALIK,
Wolfram H. WELLSSOW
TU Kaiserslautern
Kaiserslautern, Germany
waeresch@eit.uni-kl.de

Joern JORDAN
IDS Gmbh
Ettlingen, Germany
joern.jordan@ids.de

Rolf BISCHLER,
Nelia SCHNEIDER
Stadtwerke Kaiserslautern
Versorgungs-AG
Kaiserslautern, Germany
rolf.bischler@swk-kl.de

ABSTRACT

The integration of distributed generation causes an increase of the voltage magnitude in low voltage grids. In addition to classical grid expansion distribution system operators have various options at their hands to reduce the voltage rise, e.g. by installing distribution transformers with on-load tap changers or voltage regulators. But for efficient control the network operators need information on relevant operational system parameters. The classical approach of using measurement and monitoring devices from SCADA systems is comparatively too expensive and complicated. In future, smart meters can provide information about relevant operational data, which enables the identification of the system state in meshed low voltage grids. This paper proposes an algorithm for linear LV state estimation based on smart meter data and photovoltaic feed-in predictions. The results gathered from simulations and a field test are promising, especially due to a special approach resulting in a relatively high measurement redundancy which is not common for state estimation in LV grids.

INTRODUCTION

With the increasing penetration of distributed generators in low voltage (LV) grids, the distribution system operators (DSO) are facing the challenge to ensure a standardized voltage quality according to EN 50160 in the future. In a number of German LV grids the upper voltage limit of 253 V has been exceeded plenty of times due to large feed-ins of photovoltaic (PV) systems [1]. For reducing the voltage rise, the DSOs have various options, e.g. local network transformers with on-load tap changers or voltage regulators. But for their optimal operation and control, the system state, which equals the complex voltages at each node, must be known at any time. In this context, classical state estimation (SE) algorithms known from high voltage (HV) grids cannot be used due to other measurement variables and typically a negative measurement redundancy [2]. For this case, special LV state estimation algorithms have to be developed and applied in practice which allow the usage of prospectively available smart meter data. They shall estimate the network state with sufficient accuracy so that other applications such as the detection of topology faults in meshed LV grids or load monitoring of lines are feasible.

FIELD TEST PROJECT SMARTSCADA

The development of a state estimation system for LV grids is the purpose of the field test project SmartSCADA, which is funded by the German Federal Ministry for Economic Affairs and Energy. The project with partners TU Kaiserslautern, IDS GmbH, the DSO Stadtwerke Kaiserslautern Versorgungs-AG, Meteocontrol GmbH and COMback GmbH started in 2013 and includes a smart meter rollout in a semi-urban LV grid and the development of LV state estimation algorithms based on smart meter data and PV-feed-in-forecasts. Furthermore the observability analysis for LV grids is investigated. Finally the developed algorithm will be applied and tested on a SCADA system in real-life operation.

For the development of the LV state estimation algorithm based on smart meter data, real measurements from a field test are required. Therefore the LV grid shown in Figure 1 from the local DSO Stadtwerke Kaiserslautern with 120 loads and 24 PV systems was chosen as a test grid due to its high penetration with PV systems. Smart meters have been installed at 110 house connections and voltage and current magnitudes as well as active and reactive powers with sign are measured. The measurement interval was chosen to ten minutes for loads and five minutes for PV systems. The data are send via power line communication to a data concentrator and are forwarded to the DSO.

Figure 1. LV test grid in Kaiserslautern. The local network station is denoted with a yellow circle.

LV STATE ESTIMATION BASICS

Conventional state estimation algorithms are usually not usable for LV grids because of a lack of measurement equipment resulting in a negative measurement redundancy. This is shown by the definition of the measurement redundancy η with the number of independent measurements M and the number of nodes N in a network:

$$\eta = \frac{M}{2N-1} - 1 \tag{1}$$

As experience shows for effective compensation of measurement errors and especially bad data, the measurement redundancy η should attain values of at least 0.5. In contrast to HV grids η cannot be easily increased by branch currents or branch power because LV grids often consist of buried cables. Another difference in LV state estimation is the need for three-phase SE due to asymmetric system states and neutral wire currents. This implies that the computational effort is significantly higher than for single-phase SE.

LINEAR LV STATE ESTIMATION BASED ON SMART METER DATA

Classical linear LV state estimation approach

In future installed smart meters can provide a way to measure relevant operational grid variables as voltage magnitudes as well as active or reactive powers and currents. If these data from each and every house connection are available a SE is theoretically applicable, because the measurement redundancy is then greater than zero. As for classical SE algorithms power and voltage magnitude measurements are used, the SE equations are nonlinear and have to be solved iteratively.

Former work on distribution grid SE shows that it is appropriate to apply a linear SE algorithm [2]. On the one hand the algorithm is fast and without convergence problems, on the other hand the accuracy compared to nonlinear approaches is adequate enough. For that reason the algorithm to be developed is based on a linear approach which means, that only active and reactive currents and voltage magnitudes are used as input data. Assuming a grid with N nodes where the bus bar at the local network station is selected as the slack node, the system state vector **x** is defined as

$$\mathbf{x} = \left[U_{1,re} \cdots U_{i,re} \cdots U_{N,re}\ U_{2,im} \cdots U_{i,im} \cdots U_{N,im} \right]^T \tag{2}$$

where $U_{i,re}$ is the real part and $U_{i,im}$ the imaginary part of the complex node voltage $\underline{U}_i$. The chosen algebraic form has the benefit that the calculation remains linear when using voltage magnitude measurements only as the real part of the corresponding complex node voltage. This simplification is permissible due to small voltage angles in LV grids with typical values up to two degrees. Assuming the common weighted least square (WLS) method by the general objective function J(x) with the measurement value z_k and the measurement variance σ_k^2

$$J(\mathbf{x}) = \sum_{k=1}^{M} \frac{(z_k - \hat{z}_k)^2}{\sigma_k^2} \tag{3}$$

the SE approach is still linear which can be seen by the relationship between estimated measurements and the state vector **x** in (4) and in the resulting objective function (5):

$$\hat{z}_k = \mathbf{h}_k^T \mathbf{x} \tag{4}$$

$$J(\mathbf{x}) = \sum_{k=1}^{M} \frac{\left(z_k - \mathbf{h}_k^T \mathbf{x}\right)^2}{\sigma_k^2} \tag{5}$$

Thereby the row vector $\mathbf{h}_k^T$ relates measurement z_k to the state vector **x**. In matrix form the objective function results in (6), where **z** is the measurement vector (7), **H** the measurement model matrix with the linear functions $\mathbf{h}_k$ (8) and where **R** contains the measurement variances (9).

$$J(\mathbf{x}) = (\mathbf{z} - \mathbf{H} \cdot \mathbf{x})^T \cdot \mathbf{R}^{-1} \cdot (\mathbf{z} - \mathbf{H} \cdot \mathbf{x}) \tag{6}$$

$$\mathbf{z} = \left[z_1 \ \cdots \ z_k \ \cdots \ z_M \right]^T \tag{7}$$

$$\mathbf{H} = \left[\mathbf{h}_1 \ \cdots \ \mathbf{h}_k \ \cdots \ \mathbf{h}_M \right]^T \tag{8}$$

$$\mathbf{R} = \mathrm{diag}\left\{ \sigma_1^2, \cdots, \sigma_k^2, \cdots, \sigma_M^2 \right\} \tag{9}$$

In general the minimum of the objective function and thus the estimated state will be reached by solving equation (10), where the left side of equation (10) is typically called gain matrix **G**.

$$\mathbf{H}^T \mathbf{R}^{-1} \mathbf{H} \cdot \hat{\mathbf{x}} = \mathbf{H}^T \mathbf{R}^{-1} \cdot \mathbf{z} \tag{10}$$

$$\mathbf{G} = \mathbf{H}^T \mathbf{R}^{-1} \mathbf{H} \tag{11}$$

To estimate the state, the gain matrix **G** has to be inverted. The use of power or current injections or very high weights, e.g. for modeling very accurate virtual measurement such as zero injections, can lead to ill-conditioning of the gain matrix, so that solving the problem is computationally often not possible [2].

LV-SE based on the augmented matrix approach

A general way for obtaining good matrix conditions with respect to SE is using the augmented matrix approach [3]. The idea behind is to separate the virtual from the regular measurements and write them as equality constraints. Representing virtual measurements with $\mathbf{C} \cdot \mathbf{x}$ and the estimated regular measurements with $\mathbf{H}_R \cdot \mathbf{x}$ the WLS problem can be restated as shown in (12-14), were **r** represents the difference vector between actual and estimated values of regular measurements which is called the residual vector.

$$\text{minimize} \quad J(\mathbf{x}) = \mathbf{r}^T \mathbf{R}^{-1} \mathbf{r} \tag{12}$$

$$\text{subject to} \quad \mathbf{C}\cdot\mathbf{x}=0 \tag{13}$$

$$\text{and} \quad \mathbf{r}-\mathbf{z}+\mathbf{H}_{\mathrm{R}}\cdot\mathbf{x}=0 \tag{14}$$

Due to two equality constraints, the resulting Lagrangian function (15) will have two sets of Lagrange multipliers, which are often denoted as $\boldsymbol{\lambda}$ and $\boldsymbol{\mu}$.

$$\mathcal{L}=\mathrm{J}(\mathbf{x})-\boldsymbol{\lambda}^{\mathrm{T}}\cdot(\mathbf{C}\cdot\mathbf{x})-\boldsymbol{\mu}^{\mathrm{T}}\cdot(\mathbf{r}-\mathbf{z}+\mathbf{H}_{\mathrm{R}}\cdot\mathbf{x}) \tag{15}$$

The optimality conditions will be given by the partial derivate equations in (16-19):

$$\partial\mathcal{L}/\partial\mathbf{x}=0: \qquad \mathbf{C}^{\mathrm{T}}\cdot\boldsymbol{\lambda}+\mathbf{H}_{\mathrm{R}}^{\mathrm{T}}\cdot\boldsymbol{\mu}=0 \tag{16}$$

$$\partial\mathcal{L}/\partial\boldsymbol{\lambda}=0: \qquad \mathbf{C}\cdot\mathbf{x}=0 \tag{17}$$

$$\partial\mathcal{L}/\partial\mathbf{r}=0: \qquad 2\cdot\left(\mathbf{R}^{-1}\mathbf{r}-\boldsymbol{\mu}\right)=0 \tag{18}$$

$$\partial\mathcal{L}/\partial\boldsymbol{\mu}=0: \qquad \mathbf{r}-\mathbf{z}+\mathbf{H}_{\mathrm{R}}\cdot\mathbf{x}=0 \tag{19}$$

Equation (18) allows $\mathbf{r}$ to be eliminated through the relation $\mathbf{r}=\mathbf{R}\cdot\boldsymbol{\mu}$ which leads to the linear matrix optimization problem in (20).

$$\begin{bmatrix} \alpha\cdot\mathbf{R} & \mathbf{H}_{\mathrm{R}} & 0 \\ \mathbf{H}_{\mathrm{R}}^{\mathrm{T}} & 0 & \mathbf{C}^{\mathrm{T}} \\ 0 & \mathbf{C} & 0 \end{bmatrix}\cdot\begin{bmatrix} \boldsymbol{\mu} \\ \mathbf{x} \\ \boldsymbol{\lambda} \end{bmatrix}=\begin{bmatrix} \mathbf{z} \\ 0 \\ 0 \end{bmatrix} \tag{20}$$

The coefficient matrix in (20) is called Hachtel's matrix and has much better condition properties than the gain matrix **G**, when applying an additional weighting factor α for adjusting **R** [2]. Therefore in practice it is recommendable to use the augmented matrix approach for LV state estimation because the algorithm is particularly numerical stable. Furthermore observability analysis is applicable in various ways as shown by [4].

Unsymmetrical three-phase LV state estimation

As mentioned in the introduction, the state estimation for LV grids has to be applied for three phases. However the number of rows and columns of the Hachtel's matrix is three times as much as in the symmetric case. Due to the linear algorithm approach it is possible to use symmetrical components for transforming the optimization problem in a positive and negative as well as a zero sequence system. The benefit is that the resulting matrix is sparse and therefore it can be easily inverted by a LU factorization. Furthermore the results in symmetrical components can be analyzed for positive, negative and zero system independently from each other. Thus the identification and localization of bad data is easier than by calculation in the three-wire system. For transforming the three-phase voltages and currents it is assumed that the angles between the line-to-ground voltages are 120° which is a permissible assumption for LV grids even for high asymmetric loads. The number of rows and columns remains unchanged by applying symmetrical components. After solving the optimization problem the results have to be retransformed to three-wire values. The high computational effort for transforming in symmetrical components is compensated by the good solving and analyzing properties especially for asymmetric network states with high loads and PV-feed-ins.

Increasing the measurement redundancy

As the measurement redundancy in LV grids is negative or very small a special procedure for increasing the measurement redundancy is necessary. A practicable way for this is neglecting the house to grid connection (HC) lines and refer the measurements to network nodes, which decreases the number of nodes by keeping the number of measurements unchanged. The drawback of losing estimation accuracy is negligible for most cases because the house to grid connection line lengths are usually very short. Figure 2 shows an example of the proposed redundancy increasing method. Assuming three smart meter measurements per house connection box (i.e. voltage magnitude, active and reactive current with sign) the redundancy increases from -0.22 in case a) to 0.64 in case b). Thus a state estimation for LV grids is possible and bad data analysis algorithms can be applied. The accuracy of the SE algorithm can be improved by subtracting out the voltage drop on the house to grid connection lines before solving the optimization problem and by recalculating the voltage drop from the estimated network state. Another way for increasing the measurement redundancy is the use of PV-feed-in predictions or standardized load curves as pseudo measurements or virtual measurements at unmeasured branches.

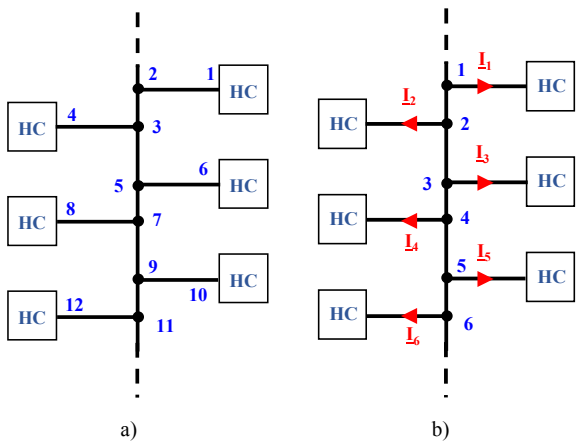

Figure 2. Measurement redundancy: considered nodes at
a) network branches and every house connection
b) with neglected house to grid connection lines

Observability Analysis

Usually the global measurement redundancy is much higher than zero due to the elucidated approach. However it is possible that in some network areas due to bad data or missing measurement values there is not enough local information available. The consequence is that the equation system of the optimization problem is not

solvable. In particular this can happen if active or reactive currents are not known at one node in the grid. Therefore observability tests have to be applied in the algorithm. A common numerical observability analysis which can be applied for the augmented matrix approach is based on the null space of the Hachtel's matrix [5]. This analysis checks if every state variable can be calculated by the existing equation system. In case of unsufficient local redundancy the approach determines the affected nodes so that pseudo measurements can be applied.

Bad Data Detection and Localization

After solving the linear state estimation equations bad data detection and localization algorithms have to be applied in order to check if bad data exist. A common way for bad data detection is the χ^2-test which determines the probability of an existing bad data on the basis of the estimated state [2]. If a bad data exists it can be identified by analyzing the normalized residuals (NR), the weighted difference between measured and estimated values. If a NR is greater than a specified limit the related measurement is denoted as bad data and could further be eliminated. Necessary measurements, also called critical measurements, can then be replaced by pseudo measurements.

Algorithm overview

The discussed procedures result in the LV state estimation algorithm shown in Figure 3. The entire process has to be performed for each time step until the network state is finally estimated.

The algorithm can be applied for symmetric and asymmetric operational network states. For asymmetric SE the input data has to be transformed to symmetrical components and the SE results vice versa. The big advantage is that the algorithm is linear and fast causing no convergence problems. Due to common mathematical proceedings the algorithm can probably be applied on intelligent local network substations.

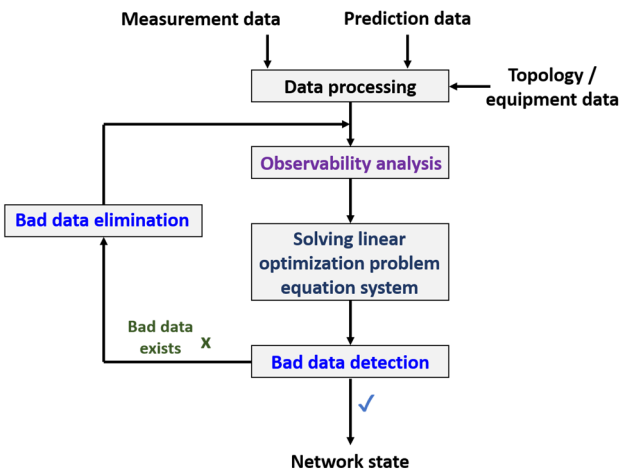

Figure 3. Linear LV SE algorithm overview

LV SE ALGORITHM ANALYSIS

Fundamentals

The described algorithm is implemented within the Matlab R2014b software environment and tested with smart meter data from the above mentioned measurement campaign. Smart meter measurement variables are voltage magnitudes as well as active and reactive currents. Furthermore the voltage magnitudes and the active and reactive currents at the three main feeders at the local network station are available. The measurement redundancy for the considered network amounts to 0.4 so that the algorithm can basically be applied. For the replacement of bad data additional PV feed-in predictions are available which are provided by the project partner Meteocontrol GmbH. Virtual measurements are associated with network branches e.g. network sleeves. The standard deviations σ of the measurement errors are assumed as 0.4 V for measured voltage magnitudes and 0.3 A for measured active or reactive currents. For unmeasured or pseudo currents σ is determined as 2 A which leads to comparatively high uncertainty SE input data if too many pseudo measurements exists. The SE time interval has been chosen to ten minutes.

SE algorithm accuracy

For the investigation of the SE algorithm accuracy at first power flow calculations (PFC) performed in PSS®SINCAL 10.0 environment are used to provide exact network states for some time steps. The scenarios of the PFC are based on the smart meter measurements so that the analysis is done for realistic network states. Active and reactive currents are used as input variables. The PFC results, which are assumed as true values, are then modified by superimposing normal distributed measurement errors with standard deviations as mentioned before. The so derived data set consists of synthetic measurement values which are used as input data for the SE algorithm. The SE accuracy is analyzed by comparing the SE results with the measurement and the true values. In Figure 4 this is visualized for the voltage magnitude of a representative node for phase L1. As Figure 4 shows, the SE results are mostly more in the range of the true values as the noisy measurement values are. The maximum deviation between estimated and true value amounts to 1.1 V which is within the 3σ-range. The shown behavior is representative for all other nodes in the grid. Therefore it can be assumed that the SE algorithm provides accurate results provided that no bad data exists.

The analysis of detection and localization of bad data is done by investigating the χ^2-test-results as well as the NR. At first it can be stated that the detection of bad data works fine for almost all cases. However, the localization of bad data from active and reactive currents doesn't work reliable at the moment. Bad data in voltage measurements can be localized with high reliability which is visualized in Figure 5.

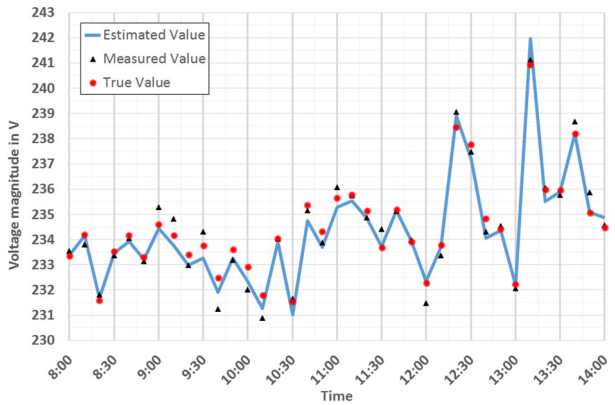

Figure 4. Comparison of estimated, true and measured voltage magnitudes for phase L1 at a network node

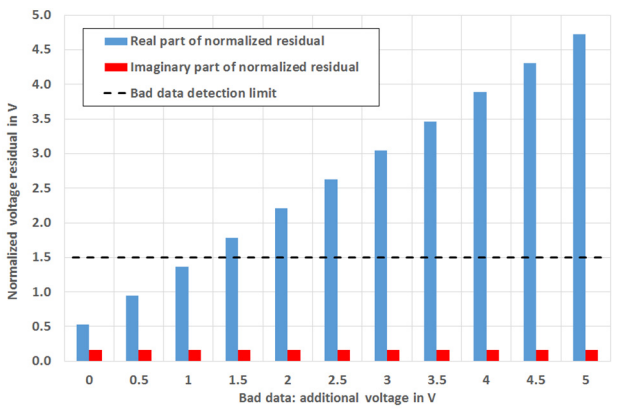

Figure 5. Voltage bad data detection by comparing the normalized voltage residuals against a specific limit

For checking bad data localization a bad data is inserted at a voltage measurement and the value is increased in 0.5 V steps, starting from the case without bad data. The real part of the NR increases with the bad data value. Bad data can be localized if the real part of the normalized residual exceeds a specific limit (e.g. 1.5 V). Due to the algorithm assumptions the imaginary part of the NR remains constant with increasing bad data values.

Issues during the investigation

The bad data analysis detected and localized some bad data which occurred for all regarded time steps. A detailed investigation showed that there were some topology faults concerning phase permutations in house connection boxes which is a common issue in LV grids as mentioned in [6]. During the tests the respective measurement values were converted and associated with the correct phases.

Another issue is the acquisition of all necessary SE input data, for instance correct network topology or parameters of cables as well as the exact position of sleeves. False grid parameters can lead to large errors in the SE results especially as the measurement redundancy is much lower than in HV networks and bad data detection is much more difficult. Therefore uncertain input data should be avoided as much as possible so that an extensive process of plausibility checks is inevitable. This is also necessary for pseudo measurements because they have much influence on the SE results.

The worst difficulty relates to the detection and identification of bad data from active or reactive currents. If a bad current value exists it can only be localized if the error made by this bad data is high enough so that the corresponding voltage error at the same node raises and exceeds the bad data detection limit. Comparatively small current bad data cannot be localized at this stage. Possibly a bad data analysis in phase quantities can improve the localization in some cases.

CONCLUSION

The preliminary results of the developed SE algorithm tested by various simulations are very promising. They show that a probable future rollout of smart meters at every household connection can provide a way for estimating the state of LV networks. The increased measurement redundancy leads to the fact that bad data analysis works great for voltage measurements even in asymmetrical cases provided that the accuracy of pseudo measurements is sufficient. Further investigations, simulations and tests will be done concerning the bad data detection and localization of active and reactive currents as well as the identification of topology faults in meshed LV grids. Finally the algorithm will be implemented on a SCADA server at the local DSO and tested under real grid operation conditions.

REFERENCES

[1] Hauffe, P.; Breidel, R.; Wendel, C.; Wellßow, W.H.; Waeresch, D.; Arnold, M.: Analysis of Voltage Deviations in the Low Voltage Grid Insheim of Pfalzwerke Netz AG. ETG Kongress, Berlin, 2013

[2] Abur, A.: Power System State Estimation. CRC Press, Boca Raton, USA, 2004

[3] Holten L.; Gjelsvik A.; Sverre A.; Felix F.W.; Wen-Hsiung E.L., "Comparison of different methods for state estimation", IEEE Transactions on Power Systems, Vol.4, November 1988, pp 1798-1806

[4] Holten L.; Gjelsvik A.; Sverre A.; Felix F.W.; Wen-Hsiung E.L., "Observability analysis and bad data processing for state estimation using hachtel's augmented matrix method", IEEE Transactions on Power Systems, Vol.3, May 1988

[5] Castillo E; Conejo A.J.; Pruneda R.E.; Solares C.: "State Estimation Observability Based on the Null Space of the Measurement Jacobian Matrix", IEEE Transactions on Power Systems, Vol.20, August 2005

[6] Wellssow W.H.; Waeresch, D.: "Identification of topology faults by smart meter data in meshed low voltage grids", Power Systems Computation Conference, August 2014, Wroclaw