VALIDATION OF EFFECTIVENESS OF VIRTUAL INSTRUMENTATION FOR DISTRIBUTION TRANSFORMERS

Ernauli APRILIA
Alliander N.V. – The Netherlands
lia.aprilia@alliander.com

Tongyou GU
Alliander N.V. – The Netherlands
tongyou.gu@alliander.com

Bert HOLLANDER
Alliander N.V. – The Netherlands
bert.hollander@alliander.com

Geert JANSSEN
IBM Research – USA
geert@us.ibm.com7

Dzung PHAN
IBM Research – USA
phandu@us.ibm.com

Jeroen SCHUDDEBEURS
Alliander N.V. – The Netherlands
jeroen.schuddebeurs@alliander.com

Jinjun XIONG
IBM Research – USA
jinjun@us.ibm.com

Yada ZHU
IBM Research – USA
yzhu@us.ibm.com

ABSTRACT

This paper reports on the results achieved in a joint Alliander-IBM project, in the framework of the Smarter Energy Research Institute (SERI), to validate models and procedures to assess asset health without relying on any instrumentation. In particular, the study considered distribution transformers and ultimately aimed at deriving a failure probability value for each of them. The models comprise a transformer loading model, top-oil temperature model, ambient temperature model, and failure probability model. All of these models can be leveraged to predict asset health and thus improve asset reliability. Even modest improvements in asset maintenance can lead to considerable cost savings.

INTRODUCTION

Electric utility companies are capital-intensive businesses owning a vast collection of expensive assets. Modest improvements in knowledge of asset health can lead to large cost savings. Lack of visibility into the asset health condition and disjointed or mismanaged historical data records, however, are two of the major barriers for an improved asset management solution. Most recently proposed techniques are based on big data analytics, thus critically depending on the quality of grid instrumentation, which is, however, quite limited in many existing utility settings and very expensive.

As one of the largest Distribution System Operators (DSO) in the Netherlands, Alliander N.V. serves several million customers with electricity. In order to distribute the electricity reliably from the 150kV level at the primary substations — which is the connection point between Transmission System Operators (TSO) and DSO — down to the 400V level at residential homes, a large infrastructure consisting of underground cables, transformers, and switchgear needs to be maintained. Failure of any of these components, for example due to aging, may lead to power outages and hence unacceptably high SAIDI (System Average Interruption Duration Index) numbers and ultimately economic loss.

Factors such as tighter budget constraints, increased demand and introduction of renewables have made the need to calculate asset lifetime ever more important. Knowing the remaining lifetime of critical assets will help asset managers to prioritize maintenance activities (OPEX) and capital investments (CAPEX), given a certain budget, which will reduce the risk of outages.

In this paper we report on the findings of a joint IBM-Alliander Smarter Energy Research Institute (SERI) [1] project entitled "Optimized Planning of Asset Management and Capital Investment (OPAMCI)." This project uses a holistic approach to address the asset health issue by combining the strength of advanced modeling, simulation and big data analytics to optimize asset maintenance and capital investment. Because of their criticality in the grid and significant associated maintenance and capital investment costs, we have selected transformers as the asset class to test our holistic approach. The focus is mainly on distribution transformers because of the sheer number of these assets and their lack of instrumentation. Of course, it is to be understood that the same approach can be applied to power transformers and other asset classes as well.

Brief project history

The methodology adopted in OPAMCI is a three-tiered approach: model development followed by model validation, and then business impact assessment.

In the first year of the project, the focus was mainly on model development [7]. In the second year of the project, the emphasis was on validation. The rationale is to ensure that we have a solid set of models that are well-understood and well-validated. Along the way, we have also illustrated how business value can be obtained or enhanced by adopting these OPAMCI models:

- A loading model that estimates the loading conditions of every single transformer as a function of time.
- An ambient temperature model that gives the ambient temperature of every single transformer as a function of time.
- A transformer aging model that takes both loading conditions and ambient temperatures into account and estimates the electrical age of every transformer.
- A failure probability model for transformers that can predict the future failure probability of transformers given their current calendar and electrical ages.
- An OPEX/CAPEX optimization model where different OPEX/CAPEX related optimizations are solved to find

the optimal maintenance and replacement schedules for transformers.

By working closely with the Alliander domain experts, we are developing such a solution using realistic utility data. Moreover, Zaltbommel, which is a municipality located in the south of the Netherlands, has been used as the test-bed to develop and validate the holistic optimization approach developed in this project. The Liander LiveLab [2] within the Zaltbommel region has several secondary substations equipped with digital real-time instruments to measure power, currents, voltages and temperatures. Some of these measurements are both on the medium voltage (MV) and low voltage (LV) side of the distribution transformer. These real-life measurements provide an ideal data source to validate the various models developed in this project.

Our preliminary results have shown that

- the OPAMCI models are validated and are able to match the measurement data with acceptable accuracy;
- model outputs can provide a much improved visibility into the asset heath conditions;
- a number of OPEX/CAPEX optimization examples based on the newly available model-produced information can result in multi-million euro savings in OPEX/CAPEX under a fixed asset management budget;
- OPAMCI can provide near real-time visibility into asset conditions, allow forward-looking what-if analysis for better grid planning, and lower the outage cost associated with asset failure.

VALIDATION APPROACH

A methodology proposed by Sargent in his paper "Verification and Validation of Simulation Models" [8] was adopted. The methodology can best be explained using Figure 1 from the paper cited above.

The problem entity is the system to be modeled. In OPAMCI, it can be thought of as the five individual components: transformer load, transformer ambient temperature, transformer aging, transformer failure probability, and transformer maintenance schedule. Or it can be thought of as the end-to-end integrated system of the five components. For ease of understanding, we will treat the five components as separate problem entities.

The conceptual model is the mathematical/logical/verbal representation of the problem entity developed for a particular study. The computer model is the conceptual model implemented on a computer. Conceptual model validity is defined as determining that the theories and assumptions underlying the conceptual model are correct and that the model representation for the problem entity is "reasonable" for the intended purpose of the model.

Computerized model verification is defined as ensuring that the computer programming and implementation of the conceptual model is correct. Operational validity is defined as determining that the model's output behavior has sufficient accuracy for the model's intended purpose over the domain of the model's intended applicability. Data validity is defined as ensuring that the data necessary for model building, model evaluation and testing, and conducting the model experiments to solve the problem are adequate and correct.

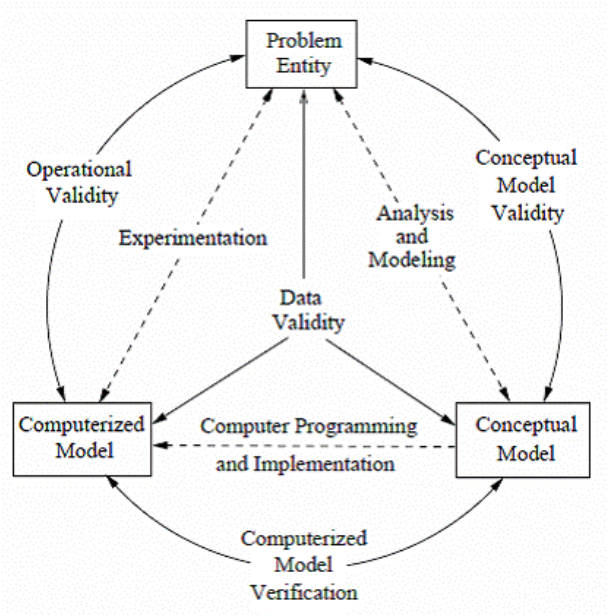

Figure 1: Overview of model validation methodology.

The ultimate goal of OPAMCI is to achieve "Operational Validity" by working with Alliander experts. Here we discuss a number of techniques that we adopted for our validation work.

Comparison to real system outputs

This is the same as the third step of the "Multistage Validation" technique as mentioned in [8]. Ideally, the best approach is to compare the results from model simulation with measurement data from the real world. The differences between these two can tell us how good the model is. If the difference is small, the model is deemed to have been validated and it should work for future prediction. If the difference is big, a model / parameter calibration procedure can be added to modify the model so that the differences are minimized. But in practice, such an approach will be too expensive and take too long to develop, especially considering the fact that the real-world data collection process is expensive, not to mention the lack of those measurement data for most models.

Expert endorsement

A practical approach to extract business value from these simulation models should not necessarily strive for 100% accuracy with respect to real-world measurements. As long as enough new information can be derived from the model simulations they are deemed to be valuable for

operational people in the organization. After all, operational people are used to making business decisions under uncertainties. In these situations we tend to consider a model validated whenever experts appreciate the results it provides in helping them make more informed decisions.

In our opinion, techniques, such as face validity, rationalism, empiricism, operational graphics, and Turing tests, all require expert endorsement, and thus belong to this category. Other techniques, such as animation, degenerate tests, extreme condition tests, fixed values, internal validity, parameter variability sensitivity analysis, and traces are more related to verification; and can be used to help experts understand the model results and make the endorsement.

Validation data

As mentioned before, Liander LiveLab in the Zaltbommel region has a number of distribution transformers and some selected LV feeders that are adequately instrumented; their data will be used for validation. Figure 2 shows the distribution transformers (squares) and the 10kV cables in that region.

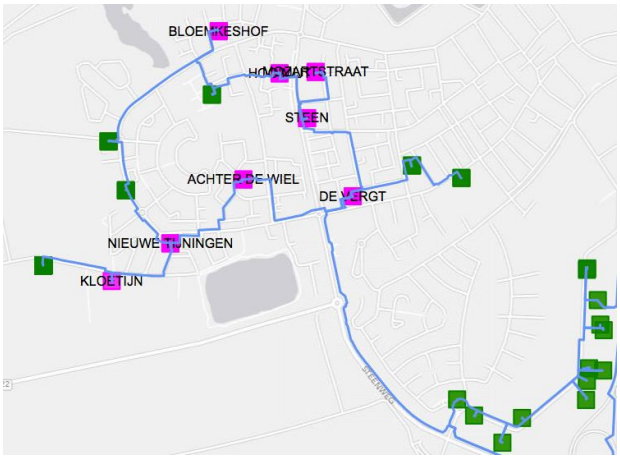

Figure 2: Liander LiveLab network overview.

Such an extensive instrumentation as done in LiveLab is of course expensive. The idea is that we can use the LiveLab data to validate our model and approach, to evaluate whether we can achieve a similar level of visibility into the grid status through advanced simulation, modeling and optimization, and to quantify the benefits of having such an extensive instrumentation.

RESULTS

In this section we present the validation results. For sake of completeness, the computer model is briefly explained, followed by a description of the test set up and some characteristics of the input data.

Load calculation

The 15-minute time-series load on a distribution transformer is calculated from publicly available yearly EDSN [5] load profiles for different categories of consumers, and the category and yearly kWh usage of customers on feeder cables connected to the transformer (Figure 3). The latter data was computed by Alliander from their GIS data model and billing records. The model merely distributes yearly consumption in a category over the applicable profile and sums over the categories.

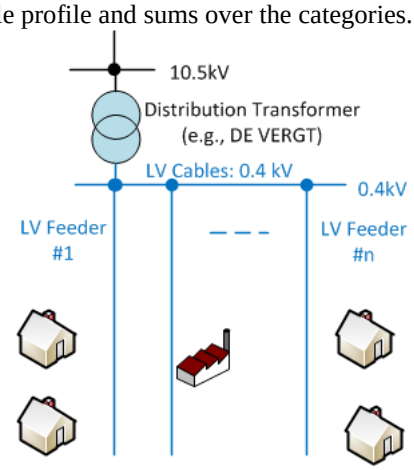

Figure 3: Aggregated load model illustration.

The validation consisted of comparing the load model against the measured values for 8 instrumented transformers. Unfortunately the customer data was only available up to 2012 and measurements only started in 2013. To break the impasse, we simply assume the 2012 data to be equally valid for 2013, which is reasonable considering the projected flat growth rate of energy consumption.

Table 1: Load model measurements and results.

Transformer	MAE [kW]	RMSE [kW]	Avg. [kW]	RMSE/ Avg [%]	#Cust
ACHTER DE WIEL	13.8	17.8	157.4	11.3	363
BLOEMKESHOF	7.0	9.5	64.6	14.7	128
DE VERGT	23.4	27.3	114.4	23.7	172
HOOIMIJT	7.6	9.6	76.7	12.5	176
INKTFORDSE-WEG	7.2	9.0	20.1	44.8	8
MOZART-STRAAT	6.0	7.6	43.0	17.7	88
NIEUWE TIJNINGEN	33.4	43.9	187.5	23.4	354
STEEN	7.1	9.1	49.5	18.4	101

Table 1 lists data of the 8 transformers under test: MAE is the Mean Absolute Error and RMSE is the Root Mean Square Error over the available time-series measured and modeled load values both in kW; for comparison the Avg. column lists the average load and RMSE/Avg gives an indication of the relative size of the error. The last column shows the number of customers. The actual time-series data over 1 week's period for BLOEMKESHOF is depicted in Figure 4. The best "matches" are achieved by transformers ACHTER DE WIEL, BLOEMKESHOF, and HOOIMIJT. Reasonable matches are seen for MOZARTSTRAAT and STEEN. Rather bad results are obtained for DE VERGT, INKTFORDSEWEG and

NIEUWE TIJNINGEN. It is surprising to see how lightly loaded INKTFORDSEWEG is, considering it is rated at 250kVA. Note however that the number of customers is very low.

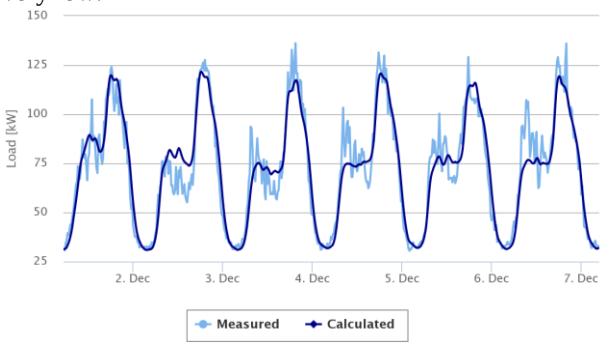

Figure 4: Load of transformer BLOEMKESHOF in Dec. 2013.

Ambient temperature

The hourly ambient temperature of a transformer in its enclosure was modeled using the nearest KNMI [6] weather station (Herwijnen for the Zaltbommel region). This was compared against the 15-minute measured interior and exterior temperatures. Out of the 8 transformers under test, only 3 of them have exterior enclosure thermometers.

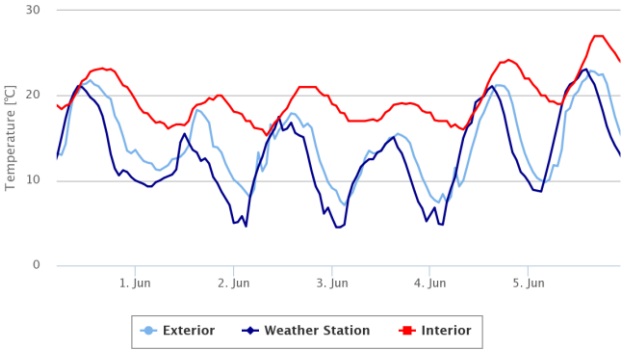

Figure 5: Temperatures for transformer INKTFORDSEWEG.

Figure 5 depicts a typical daily temperature pattern. Our model (bottom chart) seems good enough to predict the exterior enclosure temperature (at least in amplitude, although it is somewhat out of phase), but is off by several degrees Celsius from the ambient (interior) temperature (top chart). The influence of the enclosure causes a higher temperature that is lagging behind by several hours. We could compensate for that by introducing a first-order enclosure thermal model as suggested in [10].

Top-oil temperature

For the top-oil temperature the standard IEC model [4] is used. The 15-minute measured load and ambient temperature data are used as inputs; we compare the computed result against the measured top-oil temperature. As an example, in Figure 6 both the measured (shaded) and computed (at the top) outcomes are plotted for BLOEMKESHOF. The lower graph is the ambient temperature. The influence of the daily load profile is clearly visible; as is to be expected, there is a strong correlation between top-oil and ambient. The model is slightly pessimistic.

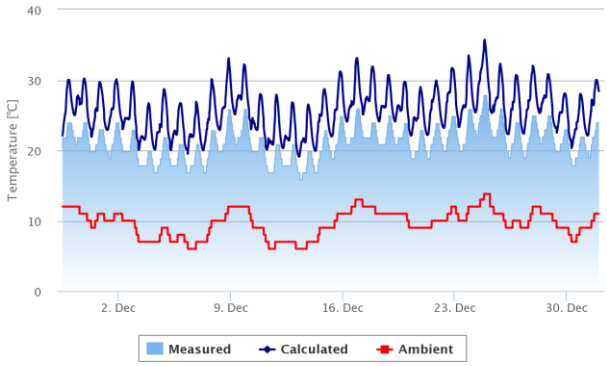

Figure 6: Transformer BLOEMKESHOF top-oil temperature.

Transformer aging and failure probability

Since there is no way to actually measure electrical age, we rely upon the top-oil and hot-spot IEC models to predict the electrical age and derive a failure probability. We observe that on average the transformers are very lightly loaded and hence the accelerated aging is only in the order of hours per year.

CAPEX VERSUS OPEX OPTIMIZATION

Utilities face the classical business decision of whether to replace (and thereby invest in new) transformers or to schedule regular maintenance and hence accept higher operating costs. We have investigated two such problems: optimizing a maintenance schedule, which was reported in [7], and optimizing a replacement schedule.

Transformer replacement

For this set of transformers, a replacement is the only option we have to improve the efficiency and reliability at these locations. Depending on their design, distribution transformers incur a certain amount of electrical power loss while in operation. Modern transformers have a higher efficiency than older ones, hence the question arises what would be the best point in time to replace the transformer. Other factors involved are increases in load and failure probability.

Losses are predominantly iron and copper losses. The former depend on the operating voltage of the transformer and for all practical purposes may be regarded as independent of the actual load; the latter are assumed to be proportional to the square of the load current.

The total cost of ownership (TCO) is an estimation of the total cost expensed over the economic lifetime of a product or system. In our case the TCO consists of two components: the purchase price and the operating costs which are mainly due to energy losses. The purchase

price is obviously a one-time expense; the operating costs however are incurred yearly for the duration of the economic lifetime which is typically set to 50 years. The capitalized losses might change over time depending on the price of electricity and other factors. All the costs are discounted to their present value taking a certain interest rate into account. In its simplest form, the problem is to find the year of replacement that minimizes the TCO for a particular transformer. More challenging problems arise when we consider a collection of transformers with a budget constraint and then ask for which transformers to replace in any given year. Even the single transformer case can be augmented with additional "cost" terms such as the impact of unforeseen failure.

Transformer maintenance

In some operation cases, a preventive maintenance (PM) action to extend the service life of a transformer is desirable. The aim of preventive maintenance (PM) activities is to decrease the failure rate and/or the electrical age of the asset. From the transformer aging model, we can estimate the current electrical age and future failure rate based on the load and ambient temperature predictions. Our goal is to determine when to perform PMs and a possible replacement for a pre-specified time horizon of interest. This is achieved by minimizing the mean cost-rate, which is represented as a function of the electrical age [7]. The total cost includes the maintenance, outage, and replacement costs, where the outage cost is derived from the failure rate function. The total expected cost comparison for a selected set of assets between the optimized maintenance schedule and the run-to-failure scheme is given in Table 2.

CONCLUSIONS

This paper demonstrates that it is possible to develop a virtual sensing approach to optimize condition-based asset management with reasonable accuracy as witnessed by our validation efforts utilizing Liander LiveLab's instrumentation data. We claim that with margins of 5 to 10% in load modeling and temperature modeling we are still able to compute transformer top-oil reasonably well. Although we cannot easily validate hot-spot temperatures, we trust the IEC model to give dependable results as a basis for electrical age calculation and ultimately deriving the failure probability.

Areas for further exploration and improvements include:

- Development of a new thermal model to capture the heat transfer across the transformer enclosure.
- Improvement of the load calculation accuracy by leveraging electrical net-list and a phase-specific electrical simulation.
- Improvement of the accuracy of EDSN load profiles by leveraging Alliander's smart meter data.
- Improvement of the accuracy of the transformer failure probability model.
- Study of the impact and business value of the optimization models.

REFERENCES

[1] http://www.research.ibm.com/client-programs/seri, IBM Smarter Energy Research Institute

[2] F. Campfens, "Liander LiveLab: A permanent test and learn environment," PowerWeb Kick-off, Delft University, Dec. 2012

[3] IEEE Power & Energy Society, IEEE Std C57.91™-2011 (Revision of IEEE Std C57.91-1995) IEEE Guide for Loading Mineral-Oil-Immersed Transformers and Step-Voltage Regulators, IEEE, 2012

[4] IEC INTERNATIONAL STANDARD 60076-7 Power transformers – Part 7: Loading guide for oil-immersed power transformers, 2005

[5] http://www.edsn.nl, Energy Data Services Netherlands

[6] http://www.knmi.nl/klimatologie/uurgegevens, KNMI hourly weather station data

[7] J. D. Schuddebeurs, J. Xiong, R. van Hees, T. Gu, E. C. Aprilia, G. Ditlow, D. Phan, G. Janssen, E. Acar, Y. Zhu, "A Case Study of Applying a Novel Asset Maintenance Optimization Methodology to Electricity Distribution Utilities using Simulation Strengthened Analytics," *Asset Management Conference*, London, Nov. 27-28, 2013

[8] Robert G. Sargent, "Verification and validation of simulation models," *J. Simulation*, 2013, Vol. 7, No. 1, pp. 12-24

[9] http://www.ieotrafo.com/ieoprdutchnormtransformers.htm, Dutch Norm Transformers, IEO Transformatoren B.V.

[10] Z. Radakovic, S. Maksimovic, "Non-stationary thermal model of indoor transformer stations," *Electrical Engineering* 84 (2002), pp. 109–117

Table 2: Total expected cost comparison.