DISTRIBUTED INTELLIGENCE ON LV NETWORKS – PROOF OF CONCEPT PROJECT RTTR AT HOOK NORTON

Russell CLAYMAN
Locamation – UK
Russell.clayman@ locamation.com

Tim BUTLER
EA Technology – UK
timothy.butler@ eatechnology.com

Ben Godfrey
Western Power Distribution
bgodfrey@westernpower.co.uk

Omar MANSOUR
Locamation-NL
omar.mansour@locamation.nl

Richard ASH
EA Technology – UK
richard.ash@ eatechnology.com

ABSTRACT

Western Power Distribution (WPD), EA Technology and Locamation have carried out a proof of concept project to demonstrate a Distributed Intelligence hardware platform to be installed at 12 WPD substations (pole and ground mounted) at Hook Norton.

Building on the existing LCNF Tier 1 project, the Distributed Intelligence project provides a proof of concept study that seeks to address issues encountered, provide understanding of network stresses and manage unnecessary network reinforcement through the implementation of Locamation's SASensor platform, carrying EA Technology's Real Time Thermal Rating (RTTR) algorithm.

INTRODUCTION

Hook Norton is a dynamic rural community in Oxfordshire with around 2,500 residents and 800 properties. The village, through the Hook Norton Low Carbon group are engaged in existing LCN funded innovation projects. Local residents have a high LCT adoption and the community is also off gas grid and therefore a high reliance on the electricity supply.

Local monitoring is needed to secure proper operation and reduce burden on communication networks. Furthermore, WPD has encountered issues with the traditional method of data capture, consolidation and analysis at the SCADA end. Problems encountered include issues with data flooding and loss of information through communication breakdown. In addition, there are concerns over the level of manpower input required during manipulation/analysis of data, with varying results.

The very high cost of data transmission and storage is also becoming an increasing factor in the determination of system architecture.

OBJECTIVES

Key objectives of this project are to demonstrate:

- The Distributed Intelligence concept on the LV network;
- The hardware, software and algorithms under consideration in operating conditions;
- The solution effectiveness as a means to reliably manage data input / information to SCADA system (or similar) at optimum levels to ensure that data can be usefully called upon for planning and / or network operations activities;
- The platform's capability to accept and execute remote upload of future algorithms and run multiple algorithms simultaneously;
- That running local analytical algorithms and exception reporting can reduce traffic and reliance on communication networks;
- Additionally:
    - Identify any portions of the trial LV cable network that are at risk of overload;
    - Identify the feasibility of increasing the rating of the networks under stress;
    - Evaluate the project findings against the predicted costs and benefits of Distributed Intelligence and RTTR that are included in the Transform Model.

THE HOOK NORTON NETWORK

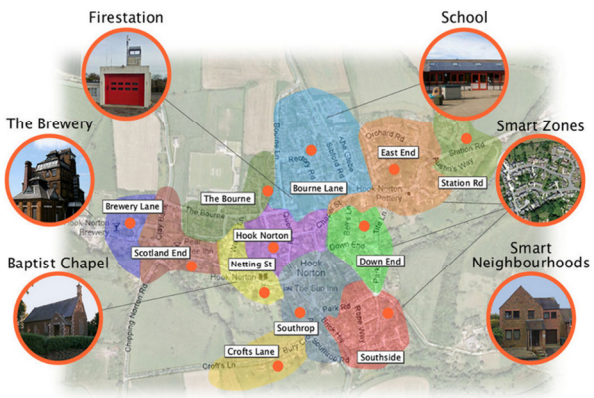

Hook Norton is an active community and WPD seek to increase their engagement with their customer base to ensure a smooth transition into a low carbon future. WPD

had identified the need to improve their grid monitoring functionality using RTTR measurements. This approach would provide more accurate results when compared to network load models as it takes the environmental conditions that are influencing cable capacities into consideration. Monitoring the network (in real time) using the RTTR approach gives the possibility of taking mitigating actions and hence could be an alternative to cable reinforcement. From the outcomes it was thought that a distributed intelligence solution would reduce the communication and performance issues.

Following successful trialling of the RTTR algorithms, WPD intend to re-use the architecture for future trials.

Benefits of the distributed intelligence approach:

As a result of this Distributed Intelligence proof of concept project, the following learning outcomes/benefits will be addressed:

- Demonstration that there is a balance between sufficient data for planning and operational purposes and being overloaded with data;
- Demonstration that the Distributed Intelligence platform is capable of accepting remote uploads and adaptions, avoiding the need for manual updates;
- Demonstration that the Distributed Intelligence platform is capable of running multiple, unrelated algorithms simultaneously.
- Evaluation of the potential of LV RTTR to be used as part of a future "solution set" for DNOs to use as an alternative to conventional network reinforcement;
- Progressive study building on the findings of previous LCNF project activities that can be shared within DNO community and project stakeholders;
- Address any issues that arise from Cyber security and Communication technologies.

DISTRIBUTED INTELLIGENCE APPROACH

SASensor

SASensor is a system product developed by Locamation. The system is ruggedized, distributed, real-time protection grade platform enabling protection, automation and control functions to be run at substation level.

Alliander, the largest Dutch DSO, have over 60 sites at 10 and 20kV running protection control and automation functionality on the SASensor System.

The unique system architecture, characterized by separation of hardware and software and fast and slow ageing components, provides many benefits that contribute to increase reliability, affordability and sustainability.

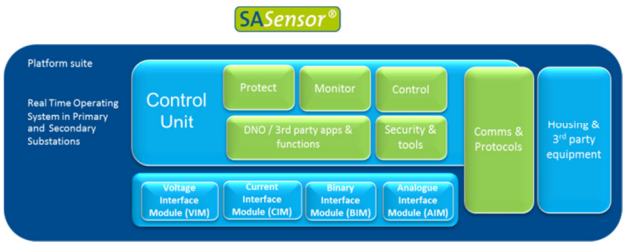

HARDWARE

SASensor iAIM Control Units were installed at each Ground and Pole Mounted substation.

Ground mounted temperature probes at each of the GM substations were connected to the iAIM via an Ethernet switch. These measurements are time stamped and collected in a log file that is subsequently uploaded to Locamation's server.

3 phase CT's were connected to each of the outgoing cables as well as an input from the LV busbar voltage. A neutral CT was also connected at 1 substation to compare the accuracy of 3 phase summation vs 4 phase measurement. These measurements are time stamped and collected in a log file.

A Weather station was installed at Bourne Lane and connected to the iAIM via an Ethernet switch. Wind speed, ambient temperature etc. is time stamped and collected in a log file. The log file was shared across the area network devices over GPRS via the Locamation server, avoiding unnecessary routing through the SCADA system (and its associated firewall) for use with the RTTR algorithms.

Note from previous LCNF learning that WPD have identified that weather stations require a lot of maintenance and are therefore resource heavy. Rationalisation of weather stations is therefore preferred.

All algorithms, analytics, measurement and communication at each substation is managed by the iAIM.

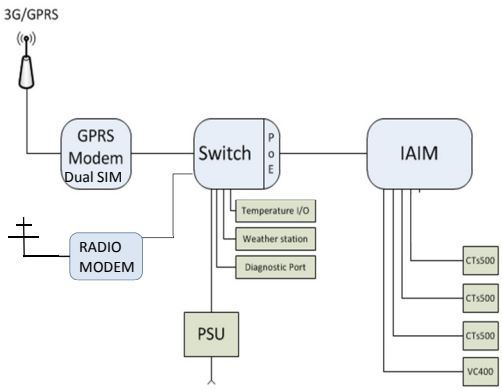

SOFTWARE

The software enables large volumes of data to run through analytics programs to be turned into useful information for the Network Operators at substation level, reducing traffic and reliance on communications.

The platform is developed to be used on daughter and granddaughter products for platform standardisation across the distribution network.

Open Platform

The Open Platform is an initiative to allow 3rd party applications to execute their software on the SASensor system in a secure manner. The concept uses virtualization technology to create secure software execution domains, where the SASensor system provides real time measurement data to the 3rd party applications. The concept From Locamation's point of view is an initiative to test new applications, speed up research and development by collaborating with 3rd party developers and research institutions, and provide to their customers an innovative platform that can cope with new emerging ideas and functions resulting from the advances within smart grids.

The system comprises protection, monitoring and control functionality as an integrated solution but with optimal modular realisation. The openness of the solution concentrates on the unconstrained functional possibilities, as perceived by users, without jeopardizing cyber-security and system integrity. Application configuration by user definable Function Blocks and securely encapsulated within encrypted containers enable a manageable software maintenance process.

CYBER SECURITY

The Electricity Network is classified as Critical National Infrastructure and security from Cyber-attack is absolutely essential. There is a growing need to automate the electricity network and a resilient architecture has to be considered at the design stage as it is difficult to implement security at a later date.

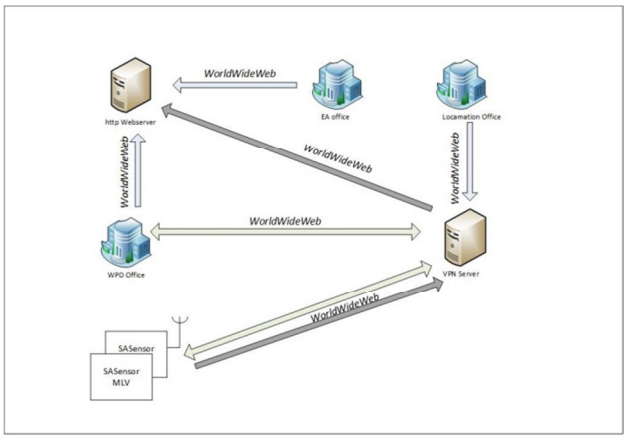

There are 3 scenarios for breach of SCADA security;

1. Using the RS232 port via the Low Powered Radio to the SCADA
2. Using the GPRS modem via the internet to the Locamation VPN server
3. Accessing the diagnostic port of the iAIM directly

The scenarios are discussed below;

1. The main risk is if the iAIM is removed from the serial port and replaced with a laptop or device which starts sending malicious data directly to the SCADA system (this applies to all connections system-wide into the SCADA network). In addition, there is a risk that the Control Unit sends too much data or invalid data which could cause improper behavior of the SCADA system. In this setup, the SCADA system is master and polls the iAIM continuously over DNP-3 protocol.

   The SCADA firewall is designed to cope with this breach and prevent any malicious data from causing harm.

   Note that the SCADA firewall is designed to accept packets of known data, but is not designed for large volumes of bi-directional, streamed traffic, which can make a centralised system very problematic and susceptible to malware when rolled out at scale.

2. The data from the iAIM to the VPN server is completely packed into the saVPN protocol, which makes it impossible to read / change without detection by the VPN system. Because there is only one active connection (the VPN connection from the iAIM to the server), it is common practice to configure the firewall so that there are no incoming connections allowed on the GPRS firewall. This also makes it robust against attacks.

3. To protect local access, the SAkey mechanism is used. When configured, this allows a low VPN

connection between the attached notebook and the iAIM. This connection is fully encrypted, and is only accepted by the iAIM if the connected notebook is using a USB key which is accepted by the iAIM unit.

REAL TIME THERMAL RATING (RTTR)

Real Time Thermal Rating (RTTR) Algorithm Integration

The Real Time Thermal Rating algorithm (RTTR) was identified as the best well established algorithm to be trialled on the system to minimize network reinforcement. This involved a mixture of overhead and underground LV cables on the Hook Norton network.

Underground cables

The algorithm is a version of an existing network CRATER model developed by EA Technology

EA Technology and Locamation worked in partnership, with input from WPD to integrate the RTTR algorithm onto the SASensor distributed Intelligence platform. The RTTR algorithm is reliant upon weather station, local ground probes and network measurement data.

For Ground cables the SASensor system measures the ground temperature near the cable and the RMS current through the cable. With these values, and the cable configuration the cable conductor temperature, cable sheath temperature, cable 4 hour rating and cable 24 hour rating are calculated. These measurements are time stamped and collected in a log file.

Overhead Lines

WPD have employed Real Time Thermal Rating of 33kV overhead line network at the Lincolnshire Hub. This algorithm was based on the formulae developed by CIGRE working group B2.43.
The same formulae have been employed to monitor the LV overhead network at Hook Norton.

DATA AND COMMUNICATION

Two types of communication technologies are used for the trial;

Low powered radio

Using the existing Low Powered Radio private network, this is used to send packets of information to the SCADA system by DNP3 It operates in the 440-470 Mhz band and is connected via a serial RS232 connection which covers;

30 minute (configurable) updates on; I rms, U rms, cos(Phi), P, Q, E, frequency, kW, kVA, kVAr, Pf, I th, I th-max, Cable thermal performance, Wind speed, Solar Energy

Configurable alarms for; I rms, U rms, cos(Phi), P, Q, E, frequency, kW, kVA, kVAr, Pf, I th, I th-max, Cable thermal overload.

Low powered radio has a higher initial capital expense and poor bandwidth but is cheap to run and not reliant upon 3rd party infrastructure.

The Low Powered Radio runs on a private network and is suited to high density populated areas.

Local web hosting

The SCADA system is configured to re-export all of the data by FTP files to the National Energy Foundation (NEF) Hook Norton community website. These files could also be sent from the Locamation device.

GPRS

GPRS is expensive to run, intermittent and reliant upon 3rd party providers on shared public networks, but it does provide greater bandwidth for uploading algorithms and is cheap and easy to deploy. The telecommunications may also be susceptible to mal operation during serious events such as storms.

The GPRS runs on a public shared network and is suited to low density populated areas or small installations.

The GPRS connects to the SAServer in the Netherlands and is used for analytics based on;

1. 30 minute (configurable) updates on; I rms, U rms, cos(Phi), P, Q, E, freqeuncy, kW, kVA, kVAr, Pf, I th, I th-max, Cable thermal performance, Wind speed, Solar Energy.
2. Configurable alarms for; I rms, U rms, cos(Phi), P, Q, E, freq, kW, kVA, kVAr, Pf, I th, I th-max, Cable thermal overload

Output data includes 4 hour and 12 hour overload capacity of the outgoing cables.

Throughout the village, different GPRS providers have black spot areas with poor network coverage. The dual SIM facility was therefore deployed to provide main and back up from 2 different GPRS providers.

In addition, the GPRS is used for remote updating the system for;

- Version control
- New algorithms as new requirements emerge
- Amendments and adjustments to the analytics; alarm thresholds, granularity etc.

Dual SIM cards.
The system is suitable for accepting dual GPRS SIM cards to provide main and back up communications through different network providers, configurable as required.

Data storage

The 5 minute averages are stored locally on the device and uploaded to a central data server when the communication conditions allow. The device normally stores approx. 8 years' worth of substation data.

The SASensor software automatically captures the Digital Fault Recording files (DFR), however, to reduce data costs, these have not been included within this contract.

DNP3

DNP3 files can easily be corrupted during the data transmission process over GPRS and local back up is therefore preferred.

CONCLUSIONS

1. Distributed Intelligence platform is capable of running multiple algorithms simultaneously, each with the potential to deliver business benefit.
2. Running algorithms at the Distribution Substation is more reliable and cheaper than a centralised system which has large initial capital costs and very high ongoing communications costs.
3. Autonomous substation control allows the substation to continue to function even with loss of communication (quite common).
4. Distributed Intelligence reduces the strain on the existing SCADA system.
5. Various communication methods will need to be adopted across the network and sometimes within the same substation dependent upon criticality, population density and information required.
6. The ability to remotely upgrade reduces the roll out time for new or improved functionality.
7. LV RTTR can give better (real-time) estimates of cable maximum ratings based on variable environmental conditions and hence additional load or generation headroom can be obtained.
8. The SCADA firewall is designed to accept information in the form of packets of data. This becomes problematic when data is needed to be streamed in and out of the SCADA firewall.
9. The hardware needs to be designed for rapid and easy deployment. As battery maintenance is a major resource issue, battery backup is not required.
10. Distributed Intelligence reduces the cost of communications, data storage and analytics.

MISCELLANEOUS

WPD

Western Power Distribution (WPD) distributes electricity in the UK Midlands, South West and Wales, with 185,000 substations serving 7.8 million customers.

Locamation

Locamation provides innovative and affordable substation automation solutions that improve manageability and efficiency by making existing installations and devices "smart".

EA Technology

EA Technology is a world leader in products for measuring and monitoring the condition of substation assets.