IMPLEMENTATION AND FIRST OPERATION RESULTS OF THE MV LOOP SCHEME

Luigi D'ORAZIO
Enel Distribuzione - Italy
luigi.d'orazio@enel.com

Roberto CALONE
Enel Distribuzione - Italy
roberto.calone@enel.com

Pietro PAULON
Enel Distribuzione - Italy
pietro.paulon@enel.com

Elio GIANNONE
Enel Distribuzione - Italy
elio.giannone@enel.com

ABSTRACT

This paper summarizes the first results obtained by Enel Distribuzione regarding the experimentation of a new and innovative scheme of operation of medium voltage distribution network: closed-loop scheme.

A different scheme of operation required a deep reorganization of the grid operation methods adopted until now; in particular it is need to foresee the installation of new and innovative protection devices, the adoption of new automation logics for the network protection components, to have the coordination between various protection devices installed on the loop, upgrade the remote control system to manage this new scheme of grid and, at the end, define a new operation rules in terms of settings up of protection system, management and control in case of typical circumstances occurring on the network (f.i. faults, maintenance and so on).

Taking into two existing feeders called "Barignano" and "Sport", operated in closed loop, coming out from a same MV bus bar of a primary substation (Ponte Annibale), located in Campania, They were analyzed the results of operation, recorded by the central control system of Enel Distribuzione. In particular, it has been focused the analysis on the comparison among the behaviour of protection system during the faults and them setting-up and, per each fault and interruption, the impact determined by the new operational scheme on the continuity of supply indexes (SAIDI, SAIFI and MAIFI).

CLOSED LOOP SCHEME CONSIDERED

Closed loop scheme was realized connecting the "Barignano" and "Sport" MV feeder ent-to-end. Two feeders are connected to the same MV bus bar of the primary substation called "Ponte Annibale". The voltage level of MV section is 20 kV. The main characteristics of the lines of the ring scheme are reported on the following table where are described the length of cable (aerial and buried), the length of overhead line, the number of MV/LV substations and MV customers (Table 1).
On the Table 2 are described the MV substations equipped with new protection devices to perform the blocking scheme logic.

Name of line	Length of line	Number MV Customer and MV/LV substations
Sport	• 17,7 km of buried cable; • 7,3 km of aerial cable; • 1,4 km of overhead line.	• 15 customers; • 62 MV/LV stations.
Barignano	• 5,5 km of buried cable; • 12,8 km of aerial cable; • 12,6 km of overhead line.	• 2 customers; • 122 MV/LV stations.

Table 1. Consistency of lines operated in closed loop scheme.

Name of line	Length of line	Equipment for the substations
Sport	• SS Tecnogen; • SS Cirio_4; • SS ME Ricerca; • SS Cirio Pozzi.	• RGDM (protection) • RTU • Switch (LAN interface)
Barignano	• SS Baronia; • SS Campo sportivo;	• RGDM (protection) • RTU • Switch (LAN interface)

Table 2. MV substation equipped with protection devices to perform the blocking scheme logic.

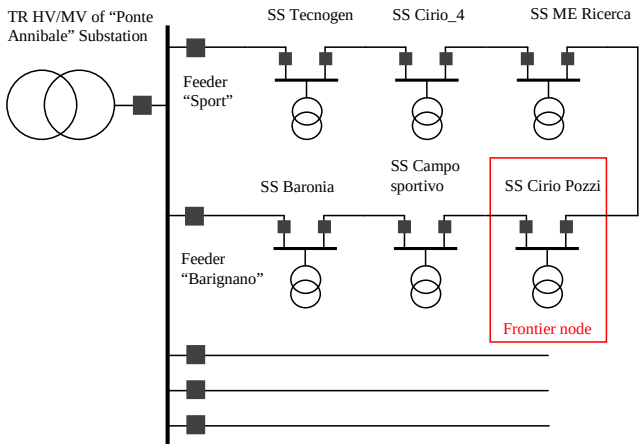

Fig 1. Closed ring operation scheme.

To realize the loop network scheme has been need an intervention of "revamping" of network, mainly:

1. installation of new aerial cable (3,6 km on Sport and 6,4 km on Barignano);
2. installation of optical fibre in wrap solution on

the aerial cable or buried solution (20,8 km);

3. Installation of new insulator on the poles where was need, during the installation of optical fibre;
4. Installation of new junction for the rebuilt part of buried cable line;
5. Installation of new circuit breaker, instead the disconnectors, in the six substation equipped in blocking scheme logic.

BLOCKING SCHEME PROTECTION SYSTEM

In order to manage effectively a loop operational scheme of network and to ensure a rapid selection of faults, avoiding interruption of a large number of customers, it have been foreseen to install and use an innovative protection system: Blocking Scheme (BS). During an electrical fault interesting a section of ring, fault detectors installed on each secondary substation equipped with BS automation, will trip. In particular, referring at the following figure, if an electrical fault occurring between the nodes “3” and “4”, protection tripped will be: “1”, “2”, “3”, “4”, “5”, “6”, “7” and “8”.

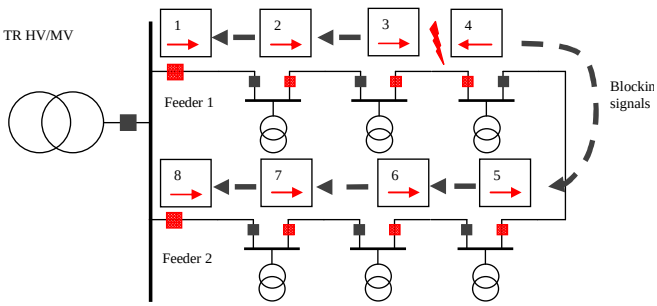

Fig 2. Fault selection by means of BS automation.

Directional intervention of protection produces the sending of a blocking signal to the protection system ahead installed. protection tripped to the protection system directly facing. So, taking into account the example showed on the Fig 2, the protection systems that receive the blocking signal will be all, “3” and “SS ME 4” except.

Blocking Scheme system allows to select all types of electrical faults, in fact on the fault detectors will be implemented the following thresholds:

- 67N.S1 first to ground directional threshold (to select the single phase to ground fault on network grounded with impedance). <u>At now implemented;</u>
- 67N.S2 second to ground directional threshold (to select single phase to ground fault on network with insulated neutral). <u>At now not implemented and combined with 67N.S1;</u>
- 67N.S3 third to ground directional threshold (to select the phase to phase through ground fault). <u>At now not implemented and combined with 67.S3;</u>
- 67.S2 second maximum directional current threshold (to select overload and short circuit with high impedance). <u>At now not implemented. To select the over load is used just the directional 67.S1 of line;</u>
- 67.S3 third maximum directional current threshold (to select the short circuits with high impedance). <u>At now not implemented, it was combined with 67.S4.</u>
- 67.S4 fourth maximum directional current threshold (to select the short circuits with low and very low impedance). <u>At now implemented;</u>

If the nodes closer to the fault failed in the selection process (breaker damaged, fault detector devices out order, etc …) it is foreseen a back-up, so, there will be the intervention of the back-up threshold of loop network protection system; it commands the opening of the breaker installed at the beginning of feeder (on MV bus bar). After that, the breaker operates the rapid closure and al operational cycle. This determines the outage for a larger portion of network, in particular all MV substations between the HV station’s breaker and the MV station that has failed.

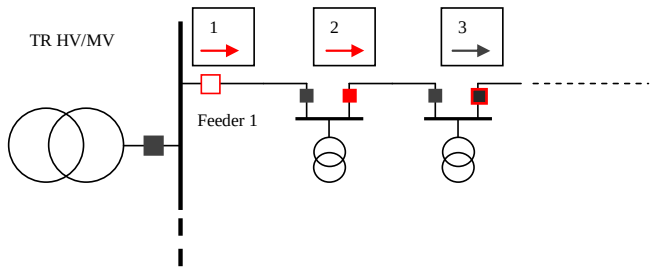

Fig 3. Back-up coordination between the protection systems installed on the closed ring network, in case of not correct operation of the breaker closest to fault section.

If the nodes closer to the fault don't send the blocking signal (not correct operation of transmission system in the nodes) there will be no correct coordination and two consecutive breakers will open with a larger portion of network outage. However there will be selection.

MV SUBSTATION PROTECTION SYSTEM SETTING-UP

The following Table shows the setting-up of the main thresholds of protection systems installed in the loop network.

Threshold	Current [A] / Voltage [V]	Type of parameter	ϕ sector (°)
67N.S1	2 A 2078 V	Io-Vo	70° ÷ 240°
67.S4	360 A	Iphase-Vphase_phase	-89° ÷ +89°

Table 3. Setting-up of protection systems in the loop network.

67.S3 threshold is used to select only the phase-to-phase faults (for high, low and very low impedance). The setting plan shown on the Table 3 is provisional; at now the operation of the loop scheme is an experimentation.

IMPACT OF INTERRUPTION ON THE CONTINUITY OF SUPPLY INDEXES

Considering the closed ring scheme for the network, between each couple of MV substation performing in Blocking Scheme automation:

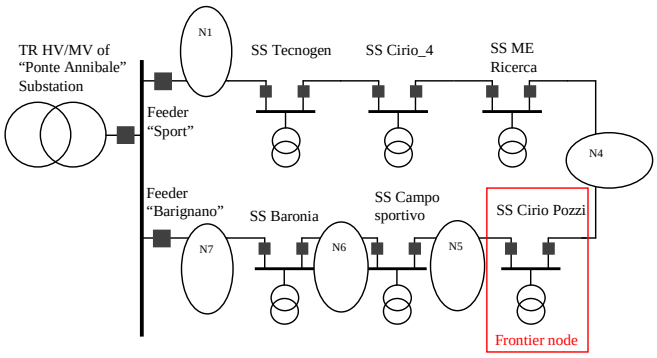

Fig 4. Definitive closed-ring network in operation.

The continuity of supply indexes (duration or number) is calculated for each single line "j" of the ring, interested by the interruption, with the following equation:

$$Ind_{linej} = \frac{\sum_{k=1}^{M}(Ni \cdot Ind_{line})_k + C}{N_{linej}}$$

Eq 1: calculation of the continuity indexes for a line "j" in closed-ring scheme.

In case of radial scheme of operation, for the same line "j", the indexes for the same interruption would have been:

$$Ind_{linej} = \frac{\sum_{k=1}^{M}\left(\left(\sum_{i=1}^{NB} Ni\right) \cdot Ind_{line}\right)_k + C}{N_{linej}}$$

Eq 2: calculation of the continuity indexes for the line "j" in radial scheme.

The advantage between the closed-ring configuration and radial scheme, taking into account the presence of the innovative protection system (Blocking Scheme), has been evaluated considering, per each interruption, the customer moment value, so:

$$\sum_{k=1}^{M}(Ni \cdot Ind_{linej})_k < \sum_{k=1}^{M}\left(\left(\sum_{i=1}^{NB} Ni\right) \cdot Ind_{linej}\right)_k$$

Eq 3: advantages for closed ring operation scheme of distribution network in terms of continuity indexes.

In this analysis was considered a fault recorded by the Enel Disribuzione's network control system and management during the 2014 year. These two fault determined a long interruption (duration more than 3 minutes) that contributed to the indexes SAIDI (duration of long interruptions) and SAIFI (number of long and short interruptions). This interruption occurred on feeder "Barignano":

Line	Fault	Fault localization (Sx – Dx)	Date
Barignano	Phase-to-Phase fault	La Baroni – Campo sportivo	10 June 2014 (15:55)

Table 4. Interruption considered to compare the effects on continuity indexes in the different operational scheme.

The mentioned interruption on the Table 4, was due to phase – to – phase fault with intervention of directional maximum current protection (67.S2), occurred on a section of "Barignano" feeder, in particular, between the substations "La Baroni" and "Campo sportivo" (see Fig 4). Taking into account this event, it is possible to calculate the first "customer moment" for SAIDI and SAIFI indexes, considering Eq 1 and Eq 2 for the single feeder "Barignano" operated in loop scheme and radial scheme. So, the value of first customer moment of SAIDI for loop network is equal to:

$$SAIDI_{Bar-Loop} = \frac{N6 \cdot T_{op-SS-loop} + C}{(N7 + N6 + N5)}$$

where the $T_{op\text{-}SS\text{-}loop}$ represents the time of interruption for the LV customers ("N6") between "La Baroni" and "Campo sportivo" substations, due to the selection cycle operated by the protection systems and breakers. For the radial operation scheme the SAIDI value is equal to:

$$SAIDI_{Bar-rad} = \frac{(N7 + N6 + N5) \cdot T_{op-INT} + N5 \cdot T_{countersup} + C}{(N7 + N6 + N5)}$$

where the $T_{op\text{-}INT\text{-}line}$ is the time of interruption for the group of LV customers ("N7" + "N6" + "N5"). This time of interruption is due to the operation cycle of the circuit breaker and disconnectors, respectively, installed at the beginning of "Barignano" feeder and the substations along the line. In addition, for the radial scheme, is necessary to consider $T_{countersup}$ the time of interruption for the LV customers ("N5") located after the section of line affected of fault. $T_{countersup}$ represents the time needs to the distributor control centre to operate, in remote control, the counter supplying maneuvers. At the same way, the SAIFI index, for the two different operational schemes, is:

$$SAIFI_{Barignano-Loop} = \frac{N6 \cdot N_{op-SS-loop} + C}{(N7 + N6 + N5)}$$

and

$$SAIFI_{Barignano-rad} = \frac{(N7 + N6 + N5) \cdot N_{op-INT} + N5 \cdot N_{countersup} + C}{(N7 + N6 + N5)}$$

Referring to Eq 3, is easy to do the comparison, evaluating the advantage for each single interruption, and

per each power supply index:

$$N6 \cdot Ind_{op-SS-loop} < (N7 + N6 + N5) \cdot Ind_{op-INT} + N5 \cdot Ind_{countersup}$$

This advantage there will be per each interruption. For the loop network, the mitigation of the first customer moment doesn't depend from the point of network where the fault occurs.

REDUCTION OF NUMBER OF INTERRUPTION FOR MV CUSTOMERS

In Italian regulation for the MV customers is foreseen a third indexes to monitor the continuity of supply: the number of interruption long and short per each single customer. DSO has to record all the interruptions that interest each single MV customer and it must to respect a determined threshold, in terms of maximum number, established by the Authority.
Equipping more sub-sequential substations supplying MV customers (like substations "Tecnogen", "Cirio_4", "ME Ricerca" shown in Fig 4, that are MV point of connection for customers), them are managed like HV customers in "meshed scheme". A fault on the connection between two sub sequent substations doesn't determine the outage of MV customer.
A clear example of it is represented by the interruption recorded on 17 February 2014, with the loop network not in service.

Line	Fault	Fault localization (Sx – Dx)	Date
Sport	Phase-to-Phase fault	Cirio_4 – ME Ricerca	17 February 2014 (01:29)

Table 5. Interruption on "Sport" Feeder for MV customers.

In that occasion a fault on the connection between the substations "Cirio_4" and "ME Ricerca" determined the intervention of the breaker installed in the "Cirio_4" substation with a long interruption for substation "ME Ricerca", the group of LV customers "N4" and the substation Cirio Pozzi (frontier node).

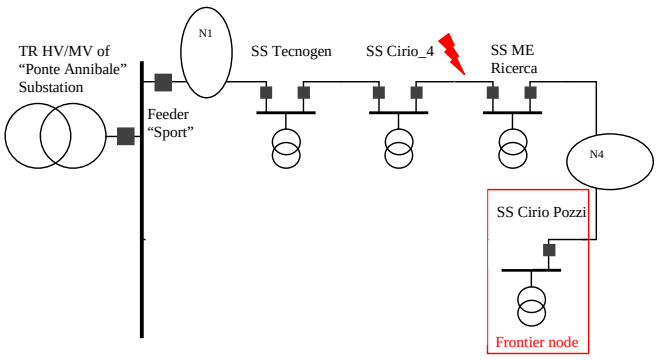

Fig 5. Radial scheme operation determines an increasing of index: number of interruption.

With a operation in loop scheme network, the same fault would have been selected by means the intervention of the protection system and the opening of breakers installed in the substations"Cirio_4" and "ME Ricerca".

CONCLUSIONS

As described and demonstrated by means the analytical comparison between the various indexes of quality of service for the two different schemes of operation (closed-ring and radial), the loop scheme ensures a better supply condition in terms of:

- **time of interruption**. Reduction of the equivalent customer moment;
- **number of interruption**. Reduction of the equivalent customer moment.
- **MV customer continuity index**. Reduction of the number of interruption for each single MV customer.

In addition the operation of network with closed ring scheme, ensure an improvement of:

- **Voltage profile**. In case of absence of DG, the customers located at the ending of each single feeder has two way of supplying, improving the voltage level in the point of connection. In case of huge presence of DG, loop scheme favours a mitigation of over voltage regime, specially, during the period with high generation level.

REFERENCES

[1] L. D'Orazio, R. Calone, 2013, " INNOVATIVE PROTECTION SYSTEM ON DISTRIBUTION NETWORK", *Cired 2013*, Stockholm, Sweden

[2] S. Botton, L. Cavalletto, F. Marmeggi, 2013, "SCHEMA PROJECT–INNOVATIVE CRITERIA FOR MANAGEMENT AND OPERATION OF A CLOSED RING MV NETWORK", *Cired 2013*, Stockholm, Sweden

[3] S. Botton, R. Calone, L. D'Orazio, A. Fatica, L. Giansante, S. Morel, R. Lama, 2011, "ADVANCED MANAGEMENT OF A CLOSED RING OPERATED MV NETWORK: ENEL DISTRIBUZIONE'S P4 PROJECT", *Cired 2011*, Frankfurt, Germany

[4] A.Capasso, R.Calone, R. Lama, S.Lauria, A.Santopaolo, "GROUND FAULT PROTECTION IN ENEL DISTRIBUZIONE'S EXPERIMENTAL MV LOOP LINE", 12th IET International Conference