RISK OF UNCONTROLLED ISLANDING ON ACTIVE DISTRIBUTION NETWORKS: SHORT-TERM COUNTERMEASURES TAKEN BY ENEL DISTRIBUZIONE

Vito BUFANO
Enel Distribuzione - Italy
vito.bufano@enel.com

Nicola CAMMALLERI
Enel Distribuzione - Italy
nicola.cammalleri@enel.com

Alberto CERRETTI
Enel Distribuzione - Italy
alberto.cerretti@enel.com

Christian D'ADAMO
Enel Distribuzione - Italy
christian.dadamo@enel.com

Luigi D'ORAZIO
Enel Distribuzione - Italy
luigi.d'orazio@enel.com

Cristiano PEZZATO
Enel Distribuzione - Italy
crristiano.pezzato@enel.com

Ettore DE BERARDIIS
CESI - Italy
ettore.deberardinis@cesi.it

ABSTRACT

In recent years, the amount of RER connected to distribution networks is increasing till a level so high to affect the classical management operation of transmission and distribution networks.

In many countries new technical rules have been issued in order to improve the RER integration in MV and LV distribution networks (e.g. the Italian [1] and [2]). Meanwhile, also other rules (commonly known as RfG) to improve safety of transmission system have been defined, imposing RER units many additional capabilities, requirements and regulation laws [3].

In particular, new technical rules, as defined now, may not be fully compliant with the automatic reclosing cycle performed by the CB at the beginning of MV feeders and/or with the automatic procedures for faulty section selection and supply restore (in Enel Distribuzione MV network automation is active in nearly 20.000 MV feeders).

EVALUATION OF THE RISK INCREASING FOR ISLADING PHENOMENA

To evaluate the increasing risk of uncontrolled islanding phenomena and its potential consequences, Enel Distribuzione commissioned two different and independent studies to Padova University and to CESI, under ENEL supervision aand coordination [4]. In particular, the following operating conditions were considered:

1) MV network islanding in case of an earth fault selection;
2) LV network islanding for automatic or manual opening of the CB at its beginning;

Taking into account the two mentioned operational conditions, CESI and University of Padova did two series of simulation, assuming three representative kinds of control for the LV static generators, trying to consider the evolution of the national and European standards and rules connection:

1) absence of control of active power P(f) in over frequency range (50,3Hz – 51,5 Hz) and absence of regulation of reactive power Q(V) in the allowed voltage limits (0,9 Un – 1,1 Un). Typical situation for all generators connected before the emission of [2] (P(f) function compliance to Annex A70 of Italian Grid Code);
2) presence of the control of active power P(f) with hysteresis in the over frequency range (50,3Hz – 51,5 Hz) and presence of regulation of reactive power Q(V) in the allowed voltage limits (0,9 Un – 1,1 Un). Typical situation for all generators connected to the network in accordance with second edition of [2] (P(f) function compliance to Annex A70 of Italian Grid Code);
3) presence of the control of active power P(f) without hysteresis (continuous regulation) in the over frequency range (50,3Hz – 51,5 Hz) and presence of regulation of reactive power Q(V) in the allowed voltage limits (0,9 Un – 1,1 Un). Typical situation for all generators in case of emission of [3];

The P(f) function for the rule2) at now implemented in Italy and the proposed standard3) is mandatory for the static generators, it has to be implemented. The Q(V) function, instead, for the generators responding to the requirements described on the points 2) and 3) of the list, has to be implemented in the generator control but, normally not active; only on request of DSO this can be activated. This function Q(V) was destined to support voltage regulation, so it should be activated, on request of DSOs, for generators connected on LV feeder with problematic voltage profile.
At the end, per each was considered different level of unbalance between Pg (generation) and Pl (load). All detail can be found on the document [4].
With these hypothesis and for the different operational

condition considered, were performed the simulations. The output was interesting and they evidence an variability about the possibility to have an islanding phenomena for the various scenarios of P and Q regulation functions implemented. The following Table shows an extreme summarize:

Possibility to island	Scenarios of
Low	No P(f) and No Q(V)
High	P(f) with Hysteresis and Q(V)
Very High	P(f) without hysteresis and Q(V)

Table 1. Possibility to island for different scenarios of regulation function implemented in the LV generators.

So, taking into account the results of the study, Enel Distribuzione decided to adopt "proper" short-term countermeasures, described on detail in this paper, in order to implement the following actions:

- monitoring of voltage presence for opened Primary Substation CBs feeders;
- modification of automatic operating cycle from MV CB feeder (in HV/MV station);
- voltage presence monitoring on MV/LV station busbars and ingoing/outgoing feeders;

COUNTERMEASURES ADOPTED BY ENEL TO AVOID THE ISLANDING

To reduce the risk for people and apparatus in case of an uncontrolled islanding Enel Distribuzione adopted various countermeasures:

Asset	Devices installed	Actions to be performed	MV islanding	LV islanding
HV/MV substation	voltage presence sensors both side of the CB	Detection of CB downstream voltage presence during a OFF duty cycle	X	
	new logic of control	Implementation of anti-islanding Enel Distribuzione operating guidelines	X	

Table 2. Adopted countermeasures by ENEL on MV network to avoid the islanding regime.

Asset	Devices installed	Actions to be performed	MV islanding	LV islanding
MV/LV Substation with switches/CBs	voltage presence sensors on both side of the witch	Detection of voltage presence downstream and upstream the CB/switch during a OFF duty cycle		X
	remote controlled LV circuit breakers	Remote disconnection of LV lines with relevant DG (i.e. Pn > 50 kW)	X	X
	fault detectors	Single-phase to ground faults detection	X	X
	new logic of control	Implementation of anti-islanding Enel Distribuzione operating guidelines	X	X

Table 3. Adopted countermeasures on MV/LV substations by ENEL to avoid the islanding regime.

The picture is a representative scheme that summarize all the implementation thought by Enel Distribuzione to manage the uncontrolled islanding operation of parte of distribution network.

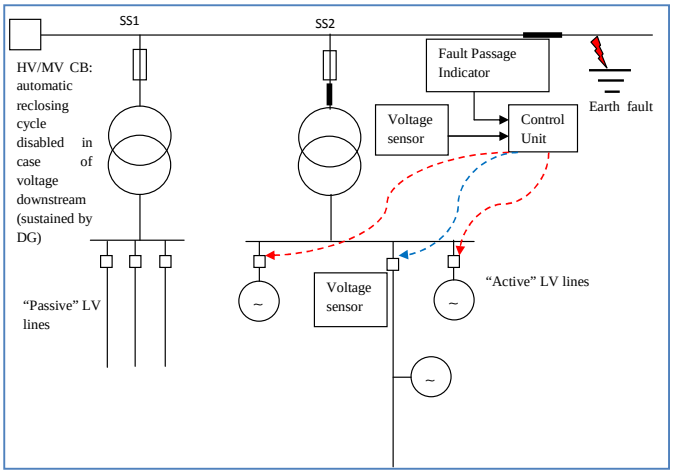

Fig 1. Representative scheme of all equipment to manage the islanding phenomena.

ANTI-ISLANDING TECHNIQUES ON MV NETWORK

The huge presence of DG on LV network, in particular for generators with characteristics in accordance with [2], increase the possibility to have an uncontrolled islanding on portion of MT network during selection of an the earth fault.

Taking into account the output of the study and the percentage amount of the DG respect the total installed

load, it was classified all the MV lines of Enel Distribuzione in three main network automation techniques implemented in Enel Distribuzione:

- FNC (Function for neutral grounded with impedance) → used to select the earth fault on network with Petersen coil clearing the fault directly from the first switch upstream from thje fault, without any CB opening;
- FRG (Function fault selection) → used on each type of network (grounded with impedance in case od short circuits and with short circuit s and earth faults in insulated neutral) to select the phase-to-phase fault and, for the network with insulated neutral, to select the earth fault;
- FNC or FRG with ICS → the before mentioned automation techniques with a circuit breaker installed in the MV substation.

Referring to that classification it was decided to adopt the following solutions to detect islanding phenomena:

1 MV sensors on the MV lines (after the breaker installed at the beginning of MV line) to identify the presence of voltage on line side;
2 MV sensors on the portion of MV lines (after the breakers installed in the MV substations);

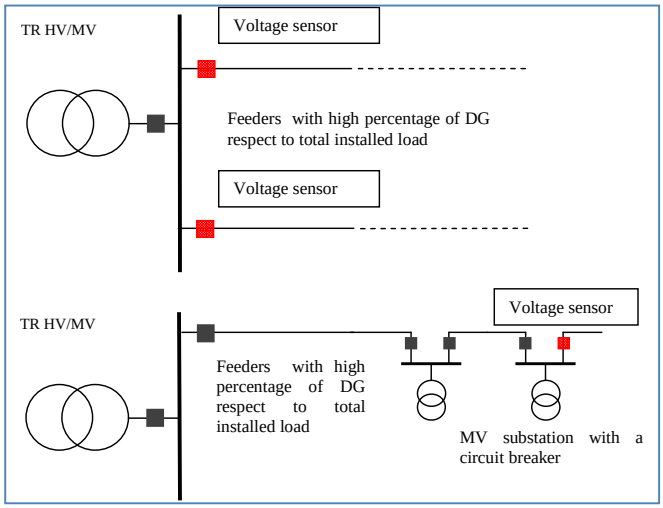

Fig 2. Installation of voltage sensors after the circuit breaker installed on the MV lines to detect islanding conditions.

Once detected an uncontrolled islanding it was implemented a specific logical, directly on board of protection systems and substation's RTU, that provides respectively to:

1 block in open position the circuit breaker of the feeder (even in case of automatic reclosing device). In this case the line circuit will not be re-supplied and the operators of the DSO control centre, by means the remote control, provide to operate a destabilization action with the opening of groups of MV substations[1] with the higher amount of installed generation on LV network;
2 block in open position the circuit breaker of the MV substation (even in case of automatic reclosing device). In this case the portion of network after the breaker will not be supplied and the operator of the DSO control centre tries a destabilizing action, by means the remote control, with the opening of groups of MV substations with the higher amount of installed generation;

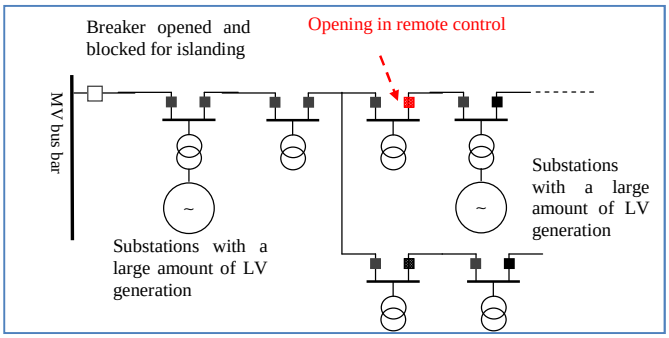

Fig 3. Technique destabilization islanding by means remote control actions.

In all way the destabilizing action with remote control are the secondary action; in fact in case of unwanted island phenomena, where are equipped, firstly there is the intervention of automatic specific techniques, foreseen for determined MV substation. These automatic techniques are described on the following chapter.

To implement all this techniques and functions new equipment in HV and MV substations will be needed, in particular:

- new automation logic implemented in the protection system panel and MV substation's RTU. That second implementation will be described on the following chapter;
- MV voltage sensors on the MV lines;
- Implementation of central control system.

The possibility to detect an uncontrolled island and block the closure of the breakers connecting two no synchronous networks, avoids to the DSO:

- to damage the apparatus of the customers;
- to stress the switches and breakers installed on the MV network.

[1] MV substations not equipped with anti-islanding techniques for MV/LV substations.

ANTI-ISLANDING TECHNIQUES FOR MV/LV SUBSTATIONS

To avoid the unintentional island on portion of MV network and on LV network, in case of MV earth fault or LV grid separation, referring to the study cases outputs, Enel Distribuzione decided to adopt the following solutions to detect an islanding condition:

1. MV sensor of zero sequence voltage, installed on MV side of MV/LV transformer of substations, to detect an islanding condition during the earth fault selection;
2. new equipment for MV/LV transformer able to detect the switch position at the beginning of LV lines and the sensor of voltage presence on LV side of transformer in case of opening of disconnector of transformer;
3. LV sensor at the beginning of LV lines to detect the presence of voltage in case of the breaker opening.

In case of detection of an islanding condition a local automation logic, implemented in the substation's RTU, provides respectively to:

1. open all the motorized and remote controlled LV circuit breakers installed at the beginning of the line with an high percentage with LV DG or completely dedicated for it. This is a destabilization action, with which the DSO tries to disconnect a large amount of LV generation able to sustain an islanding regime during the earth fault selection;
2. open all the motorized and remote controlled LV circuit breakers where only generation is connected;
3. block automatic or remote controlled closure for the LV circuit breaker where the voltage sensor detected voltage presence after the opening of circuit.

To implement all this techniques and functions new equipment in MV/LV substations will be needed, in particular:

- new automation system to realize the control of the electrical devices installed on the secondary plants and on the LV network;
- innovative fault detector devices to identify a potential condition for an island operation;
- medium voltage board with voltage sensor, fuse and disconnector state detector;
- remote controlled low voltage circuit breakers to opening the LV lines;
- voltage sensors on the LV lines;
- implementation of a communication data system;

All these devices are not independent; in fact they have to be utilized in a coordinated way, as described in this chapter.

CONCLUSIONS

The above mentioned short-term countermeasures will allow to detect uncontrolled islanding phenomena at MV feeder, portion of MV feeder, MV/LV substation or LV line level. Any uncontrolled operation of a network's portion has to be adequately managed in order to avoid mainly the risks for apparatus (DSOs and Users).

Obviously, the implementation of such short-term countermeasures also affects negatively the power quality, in terms of continuity of supply. So, from the DSO's perspective, a further revision of the connection and operation rules of DGs power plants for the distribution network should be considered, in particular regarding their capabilities and controlling functions.

To ensure a further mitigation of risk to islanding phenomena, after the publication of the results of study, Q(V) regulation for the DGs connected to the LV network has temporary been excluded for all, in order to reduce at least the stabilizing effect of such regulation. This last measure deprive the DSOs to the possibility to use an instrument to solve the problems of voltage profile on LV network.

REFERENCES

[1] CEI Comitato Elettrotecnico Italiano, "Standard-CEI 0-16, Reference technical rules for the connection of active and passive consumers to the HV and MV electrical networks of distribution Company", 2011-12.

[2] CEI Comitato Elettrotecnico Italiano, "Standard-CEI 0-21, Reference technical rules for the connection of active and passive users to the LV electrical Utilities", 2011-12.

[3] ENTSO-E Network code for "Requirements for grid connection applicable to all Generators", Final Draft 8 March 2013.

[4] "ISOLA INCONTROLLATA NELLE RETI DI DISTRIBUZIONE", Studio dell'università di Padova, ENEL e CESI. 17/05/2014

[5] Vito Bufano, Christian D'Adamo, Luigi D'Orazio, Cristian D'Orinzi, 2013 "INNOVATIVE SOLUTIONS TO CONTROL UNINTENTIONAL ISLANDING ON LV NETWORK WITH HIGH PENETRATION OF DISTRIBUTED GENERATION", *Cired 2013, Stockholm, Sweden.*