PERSPECTIVE FUNCTIONS OF LV MICROGRIDS: SIMULATIONS AND TESTS ON THE RSE'S TEST FACILITY

Diana MONETA
RSE SpA
diana.moneta@rse-web.it

Matteo ROSSINI
Università degli Studi di Milano
matteo.rossini1@studenti.unimi.it

Maurizio VERGA
RSE SpA
maurizio.verga@rse-web.it

ABSTRACT

The increase in exploitation of Renewable Energy Resources (RES) up to 80% of the electricity gross consumption in 2050, in scenarios under discussion in several EU Countries, will require the power system to evolve towards a more resilient architecture able to face the expected challenges (poor system inertia, RES fluctuation, steep load curves, etc.).
Given the additional constraints deriving from possible contingencies at all the voltage levels, a stronger coordination between operators and third-party resources is indispensable to operate the overall system in a stable, reliable, and economic way.
Microgrids represent a possible solution to face the above challenges. The paper presents a voltage controller able to manage complex optimization in order to get a proper interaction between the microgrid and the power system. Laboratory and experimental results are presented together with perspective applications.

INTRODUCTION

Decarbonisation of Europe's power system goes through increasing targets for the exploitation of renewable energy resources (RES), together with energy savings and improved market schemes. Large share of not programmable RES, basically based on small-size generation, involves several criticalities on the observability and the controllability of the system itself.
Given the additional constraints deriving from possible contingencies at all the voltage levels, a stronger coordination between operators and third-party resources is indispensable to operate the overall system in a stable, reliable, and economic way. "Microgrids" are studied among the possible solutions for improving the system's resilience, supporting the further growth of RES guaranteeing at the same time proper levels of quality of service with the minimum cost for the customers.
According to CIGRE Working Group C06.22, Microgrids can be defined as "electricity distribution systems containing loads and distributed energy resources, (such as distributed generators, storage devices, or controllable loads) that can be operated in a controlled, coordinated way either while connected to the main power network or while islanded".
In the following, after a short summary of microgrid definitions, an advanced approach for the optimal operation of a microgrid is described. The off-line analysis (laboratory testing) and real field operation on the RSE experimental microgrid are then described. Finally, a comparison with the control schemes on public networks and the future evolutions are discussed.

DEFINITIONS AND MODELS OF OPERATION FOR MICROGRIDS

Without entering into deep details, microgrids are usually classified into three main typologies [1]:

- Customer microgrids, usually downstream of a single point of common coupling (PCC).
- Utility microgrids, involving a portion of the public grid. They differ from customer microgrids since they include parts of a traditional utility infrastructure. Therefore, they must comply with existing codes for these regulated activities.
- Isolated remote power systems, since they cannot operate grid-connected by definition.

Regarding the ownership, a microgrid can be owned by the Distribution Network Operator (DNO), by a customer, or by an independent owner. The first two cases can be seen as special cases of the 'independent model' where microgrid's costs and benefits are allocated to either the DNO or the customer.
Several benefits are expected from microgrids: higher quality of service, increased reliability and flexibility, reduced costs for energy purchasing from the grid, reduced Green House Gases emissions.
In most European countries islanded operation of part of the public grid is forbidden for safety and security reasons, and in the normal operation it is not justified given the high level of quality of service. Then in the following utility microgrids are no longer discussed.
Conversely, the customer-owned microgrid (true microgrid) is a rising concept since it allows to increase self-consumption of RES generation, often adopting an overall energy optimization including both electricity and heat. With decreasing direct incentives for RES generation, in addition to lesser purchasing costs self-consumption usually benefits from system charge exemption, letting this scheme to become competitive. In Italy, for example, about 700 MW of new PV plants installed in 2014 were not covered by direct feed-in-tariffs but were justified from the direct consumption of their production in customer premises. In particular, a proper mechanism ("SEU", User Efficient System) enables operators of power plants up to 20 MW

to sell their electricity output to a third party without using the national transmission grid.
In perspective, microgrids could provide ancillary services to the DNO, in terms of scheduled profiles and/or requested modulation of energy at the mutual interface. It becomes clear how optimization of available distributed energy sources (DER) in the microgrid is the key point for benefit from this architecture.

RSE TEST FACILITY

The Distributed Energy Resources Test Facility (DER-TF) in RSE is a three-phase LV Microgrid consisting of several generators with different technologies (renewable and conventional), controllable loads and storage systems. The microgrid is connected to the distribution grid through a 23kV/0.4kV transformer. It allows to test the single components, the communication aspects and different optimization algorithms on fully configurable topologies. DER-TF was recently selected to participate to the Smart Grid International Research Facility Network (SIRFN) within the International Smart Grid Action Network (ISGAN) [2]. It is also involved in different European projects [3].

The optimization algorithm, to be integrated into the SCADA (Supervisory Control And Data Acquisition) system of the test facility, has to guarantee firstly proper voltage and current values in all nodes and branches of the microgrid. Secondarily it has to permit the fulfilment of further goals.
For the activities described in this paper, the algorithm VoCANT (Voltage Controller for Active NeTworks) developed by RSE was adopted. This algorithm, based on an optimal power flow, allows to reach several technical goals identifying the 'best' solution with respect to a defined cost function [4], acting on several resources. 'Costs' can represent actual costs of dispatching or only a ranking criterion among the available controllable resources. The definition of the cost function, together with the technical constraints, permits the algorithm to reach several goals at the same time.
VoCANT can be use both as an off-line tool for analysing different scenarios and as on-line controller. It is under test as a pure voltage controller on a large-scale MV network with high RES presence [5]. The high flexibility of its approach allows the adoption for the overall optimization on microgrid applications as well.
The investigation has focused mainly on the following issues, evaluated as more feasible in the customer microgrid case:

- Scheduled net exchange, that is the microgrid has to respect a hourly profile for its net exchange at its PCC. The profile is calculated one day ahead starting from the forecast of load and RES production, and with a successive optimized scheduling.
- Fixed maximum absorption from the PCC. This scheme aims to reduce cost of electricity purchasing (since fixed charges are usually calculated on the contractual power), thanks to the optimal management of available DERs. A constraint on the Power Factor (PF) at PCC can be added in the optimization problem.

Setting properly the cost function and the characteristics of the PCC (managed as a particular node), it is possible to select the desired scenario.

LABORATORY TESTING

An example of off-line optimization for the 'maximum absorption' case, together with a strict PF=1 constraint, is described in the following. The allowed voltage range for all node was $U = U_{nom} \pm 5\%$ (380 ÷ 420 V).
The selected configuration (Fig. 1) was identified according to these criteria: it had to show significant voltage variations but at the same time it should be rather representative of realistic conditions in terms of loads, generators and storage devices of a real customer microgrid.

The test facility is equipped with a controllable load (main load of the scheme) with 93 kW / +69 kVAr (inductive) of maximum absorption; other loads amount to less than 3kW / +3 kVAr. At the PCC (node #1 in the scheme) the active and the reactive power can range respectively in ±550 kW and ±550 kVAr.

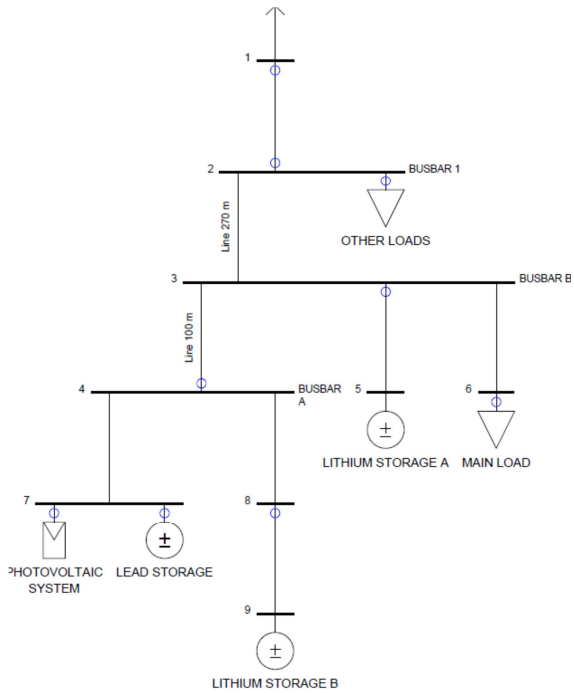

Fig. 1 – Selected configuration for the limited absorption test case. Node #1 = Point of Common Coupling (LV side of MV/LV transformer); blue circles: measurement devices

A. Optimization - input

In order to perform the optimization, for a given network VoCANT needs the following inputs:

- Technical constraints: voltage and current ranges.
- Controllable resources: *capability* (i.e. the {P,Q} area where they can be dispatched) and the 'cost' for dispatching. In addition for storage units: capacity, minimum and maximum energy level, efficiency, energy level at the end of the time horizon.
- Forecast for loads and generators on the whole time horizon.

In the scheme in Fig 1, generators have the characteristics summarized in the following table.

Table I – main parameters of generators

	P_{min} [kW]	P_{max} [kW]	Q_{min} [kVAr]	Q_{max} [kVAr]
PV	-1	30	-2	1
Lead	-20	10	-15	15
Lithium – A	-60	20	-100	100
Lithium – B	-30	30	-24	24

Regarding the energy, storage devices have the following characteristics:

Table II – main energy parameters of storage devices

	Capacity [kWh]	$Energy_{min}$ [kWh]	$Energy_{max}$ [kWh]	Cycle efficiency
Lead	57.6	5.8	51.8	0.85
Lithium – A	36	4.8	32.4	0.86
Lithium – B	30	4.5	27	0.927

In a real case, the load profile is calculated from historical data and from indirect estimation (based on weather forecast and other parameters usually). In this activity, the PV and load profiles were elaborated from a deep evaluation of possible residential and tertiary customers in a real microgrid. In particular, in order to get a rather varying pattern with more than one daily peak, the load profile belonging to a block of residential buildings was summed up to an office/commercial profile. Similarly, the PV production was elaborated from available experimental data of the DER-TF in a corresponding season period while in the real case it derives from forecast tools.

B. Optimization - results

The following graphs show the resulting active and reactive power profiles for the PCC and the storage devices, starting from the above described load and PV profiles.

Fig. 2 shows clearly the objective of respecting the maximum active power absorption (33 kW) is fulfilled. When the net load exceeds this threshold, the microgrid relies on the storage devices to get the needed energy. The algorithm has calculated the better periods for recharging the storages in order to make them able to feed the loads during the evening peak. Successively they are filled up to 50% of the respective capacity, as requested by the optimization parameters. The profile in Fig. 3 shows the PCC reactive power is zero during the entire time horizon as expected.

It is worth underlining that managing storage devices needs to handle a multi-period optimization: as summarized in Fig. 2 and Fig. 4, the setpoints cannot be calculated considering the single time period but analysing the overall horizon. This allows to identify the 'best' periods for charging/discharging them, but at the price of further input data (forecast profiles) and increased calculation effort.

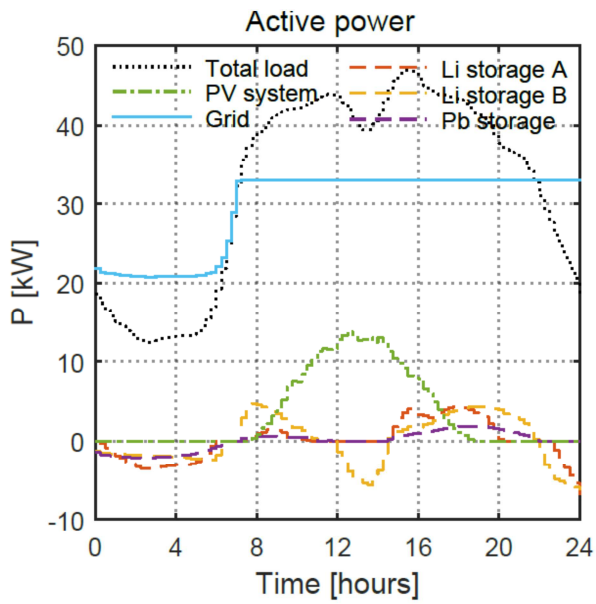

Fig. 2 – offline optimization. Active power profiles (solid line: PCC; dotted line: total load)

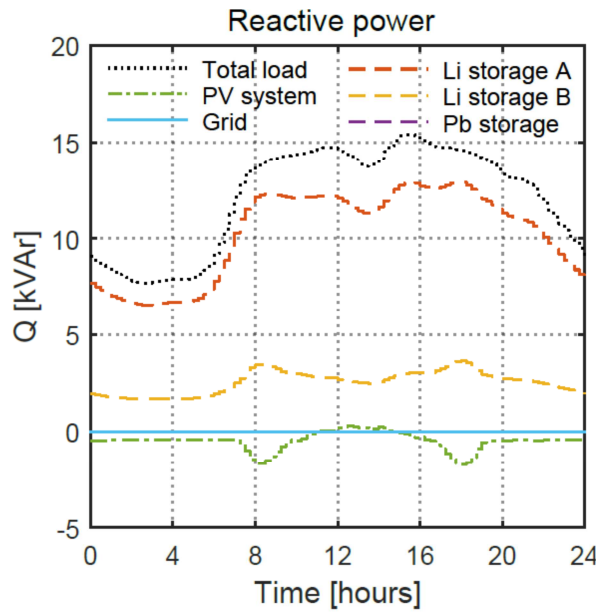

Fig. 3 – offline optimization. Reactive power profiles (solid line: PCC; dotted line: total load)

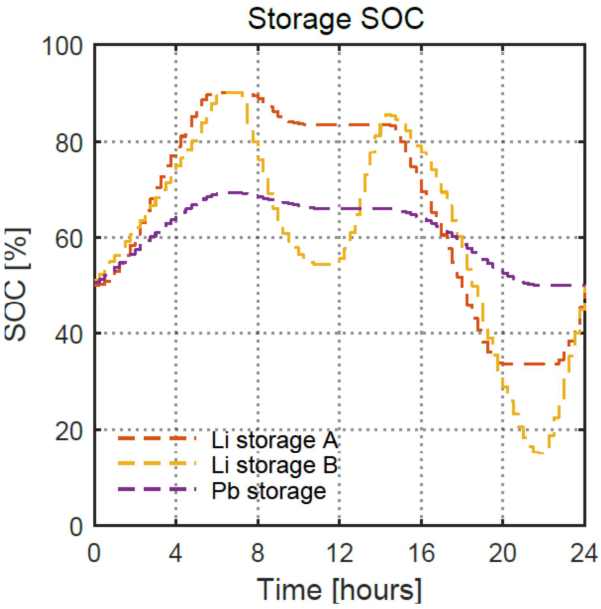

Fig. 4 – offline optimization. State-of-Charge of storage devices calculated by the optimization algorithm

EXPERIMENTAL TESTING

In this example, a simpler scenario was under investigation: PF = 1 at PCC, U = U_{nom}±5%. In this test, a gas microturbine is present, with following *capability*: P_{min} = 44 kW / P_{max} = 87 kW, Q_{min} = -35 kVAr / Q_{max} = 40 kVAr.

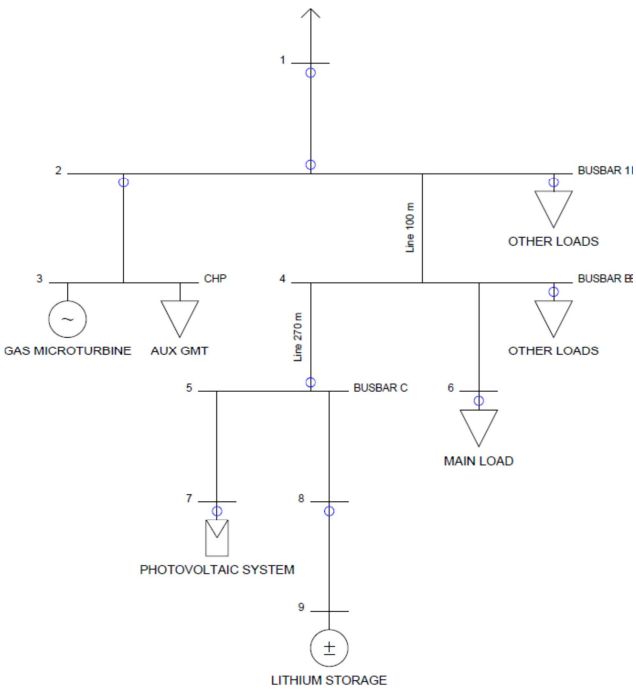

Fig. 5 – field test configuration

The microturbine operates in a co-generative configuration, that is it has to follow a thermal load profile. For this reason, it is considered as a fully controllable resources for its Q capability but only little displacements from the actual active power value can be requested by the algorithm.

Given the quite low loads absorption, in the above described configuration of the DER-TF no significant voltage drops can be observed. Then VoCANT was activated for improving operation (reduction of power losses, etc.) even if voltage in all nodes lies within the admissible range.
Further to usual technical goals, the aim of this test was to check the correct operation of the controller interacting with the SCADA. In the online operation, triggering of the VoCANT block was set to 15 min (to face slow voltage variations basically). Load profile was updated on a 5 min interval (with an offset with respect to the Voltage Controller triggering).

Field tests have shown the following results:

- The optimization goals are respected: voltage, currents and power factor at the PCC.
- The optimization in the real time continuous operation has been successful. The entire cycle (data acquisition, optimization, setpoint actuation) is completed in a very short time (less than 30 sec in total).

It is worth underlining that in the online operation, VoCANT gets updated input data at each time period, in particular measurements override past forecasted values, and updated forecast profiles are used when available.
The algorithm is able to manage time variable constraints (e.g. different maximum power absorption values during the day) but also to adjust the calculation of the optimal setpoints in case of boundary variations among the triggering periods. The overall optimization is changed accordingly to a real time request concerning different constraints.

FINAL CONSIDERATIONS AND FUTURE DEVELOPMENTS

Increasing of distributed generation, especially from RES, can entail several criticalities both locally (distribution network) and globally (power system). Current rules and grid codes are under revision to face the above issues, moving towards a real integration of RES generation into the system.
In perspective, the current architecture of the power system is subject to a major change, where the sharp definition of roles of the various elements (transmission system, distribution networks, generators, customers) is somewhat vanishing. In particular, ancillary services will be provided by a multiplicity of actors to the various levels of the power system.

Voltage control of public distribution network, for example, can rely on local regulation provided by distributed generators, without a telecommunication infrastructure. Anyway, more complex functionalities – e.g. power exchange at the primary substation – need usually a centralised approach. Microgrid operation needs centralised approach as well, since it has to reach internal goals (technical and economic optimization) together with respecting the additional constraints at the interface.

Currently microgrids are based on business models relying mainly on self-consumption: several examples of this scheme are already present. In future, customer microgrids could participate to the ancillary service market, e.g. providing balancing services, increasing their economic attractiveness.

The availability of flexible optimization algorithms, such as VoCANT, will allow microgrids to compose the complex needs coming from the inner operation to the external requests.

Acknowledgments

This work has been financed by the Research Fund for the Italian Electrical System under the Contract Agreement between RSE S.p.A. and the Ministry of Economic Development – General Directorate for Nuclear Energy, Renewable Energy and Energy Efficiency in compliance with the Decree of March 8, 2006.

REFERENCES

[1] Microgrids: Architectures and Control. Nikos D. Hatziargyriou. Edited by Nikos Hatziargyriou, 01/2014; Wiley-IEEE Press

[2] Smart Grid International Research Facility Network (SIRFN) http://www.iea-isgan.org/?c=2/27/61

[3] ELECTRA European Liaison on Electricity Committed Towards long-term Research Activity Integrated Research Programme – WP2 Development of Joint Research Facilities http://www.electrairp.eu/index.php?option=com_content&view=article&id=111&Itemid=163

[4] D. Moneta, A. Gelmini, C. Carlini, M. Belotti, "Storage units: possible improvements for voltage control of MV distribution networks", proceedings PSCC Power Systems Computation Conference, Stockholm, Sweden, August 22-26, 2011

[5] L. Consiglio, D. Stein, D. Moneta, G. Viganò, I. Rochira, C. Arrigoni, "Voltage control system developed inside the Italian Demonstration of GRID4EU: laboratory tests first results", paper 0162 *proceedings* CIRED Workshop 2014, Rome, June 11-12, 2014