MODELING&SIMULATION EXTRAPOLATED INTERNAL ARC TEST RESULTS: A COUPLED FLUID-STRUCTURAL TRANSIENT METHODOLOGY

Jérôme DOUCHIN
Schneider Electric France
Jerome.douchin@schneider-electric.com

Emmanuel Frangin
Schneider Electric France
Emmanuel.frangin@schneider-electric.com

Ezequiel Salas
Schneider Electric Mexico
Ezequiel.salas@schneider-electric.com

Sandip Hirade
Schneider Electric India
Sandip.hirade@schneider-electric.com

ABSTRACT

Extrapolation of internal arc tests using simulation tools saves cost and development time. Such an approach has been proposed by the CIGRE brochure 602[1], which provides a guide for simulation review. For metal enclosed medium voltage switchgears, equipped with a gas exhaust duct, the extrapolation can be done simulating the structural response of the enclosure to the pressure field caused by the internal arc. For sealed compartments equipped with a valve, such as Gas Insulated Switchgear vessels or epoxy switches, this pressure field is non uniform in space, in addition being time dependant. Thus, a coupling has to be done between the fluid solver, which calculates the pressure field transiently in 3D, and the structural solver, also transient in 3D. Such a coupling is described in this paper. It has been found that the methodology described in this paper captures accurately enough the pressure field, a first step required for a coupling methodology to be relevant. A methodology of accuracy checking is proposed, and simulation results shown.

INTRODUCTION

The paper will present the Schneider Electric Modeling & Simulation strategy to extrapolate from a given internal arc type test of a given medium voltage switchgear configuration, to a similar product in the same MV switchgear range, or considering changes in the testing configuration, e.g. a smaller plenum which could be required by special switchgear rooms with limited ceiling height.

This approach is possible due to, on one side, the pressure measurements done when performing the internal arc type tests, and on the other side, the development of modeling & simulation techniques on both CFD and structural, as well as in their coupling.

PRESSURE FIELD CALCULATION USING COMPUTATIONAL FLUID DYNAMICS

(CFD) SOFTWARE

CFD modeling process background

The basis of the arc modelling process is given in Besnard 2009 [2]. The Arc is modelled as a dedicated gas volume, which is located precisely in the region of space between the electrodes. The arc power is injected in this dedicated volume.

A real-gas model is used, as derived in [3]. This allows using the same gas material inside the arc region, where the temperature is typically in the range 11-14kK in air, and all around, where part of the gas stays at ambient temperature.

The arc region balances its temperature thanks to a net emission model. The vaporization of material around the arc due to intense radiation is modelled, and has a significant impact on the pressure rise and the convection of hot gases.

Although the gas speed stay below the sound speed, typically velocities are in a range of Mach 0,1 – 0,6. The compressibility law of the real gas plays then a major role in the fluid flow.

CFD pressure calculation method accuracy

During physical internal arc tests, pressure is a practical variable to measure, that can be used to check the accuracy of the computational models – unfortunately temperature and velocities (x,y,z) measurements are not performed so far. Often the peak value of the pressure in the arcing compartment is used as criteria, but then one has to cope with the following facts :

- All models include a set of coefficients, which can tune the result in the arcing compartment.
- If a GIS is considered, the peak value is controlled by the bursting pressure of the vessel valve.

In this paper, a set of four criterions is then proposed to assess the accuracy (Figure 1). It shall be applied to at least 3 different pressure sensors, located differently in

space, in order to be representative of the pressure field.

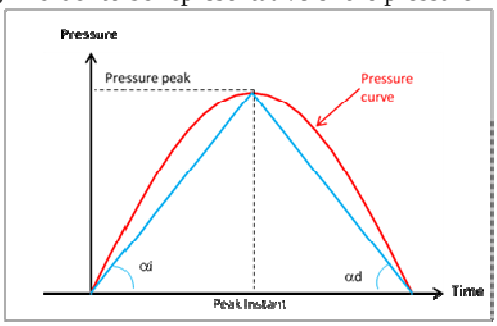

Figure 1: Criteria for calculation accuracy.

- Criteria 1: slope of the pressure rise
- Criteria 2: pressure peak value
- Criteria 3: synchronization of peak instant
- Criteria 4: slope of the pressure decrease

Example of internal arc within an Air Insulated Switchgear (AIS) compartment

To serve as an example, a typical cable compartment fault in a secondary AIS is shown.

Three cells are assembled. The arc takes place in the right end cell, in the cable compartment. A bottom exhaust is arranged by a dedicated duct below the switchgear, which communicates with this duct by means of venting flaps.

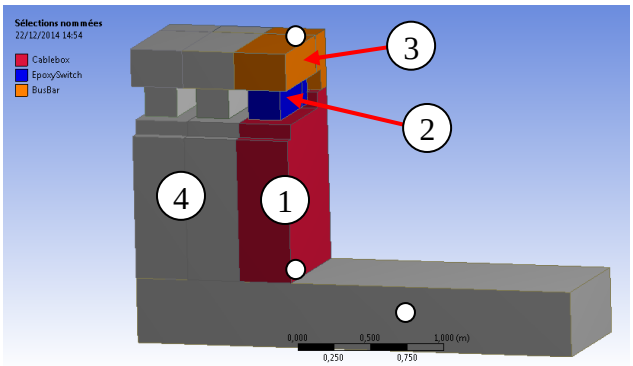

Image 1: 3D view of the tested switchgear.

- 1 (in red): the cable compartment
- 2 (in blue): the epoxy switch
- 3 (in orange): The busbar compartment.
- 4 (in grey): middle and left cells, and gas duct.
- White points: pressure sensor locations

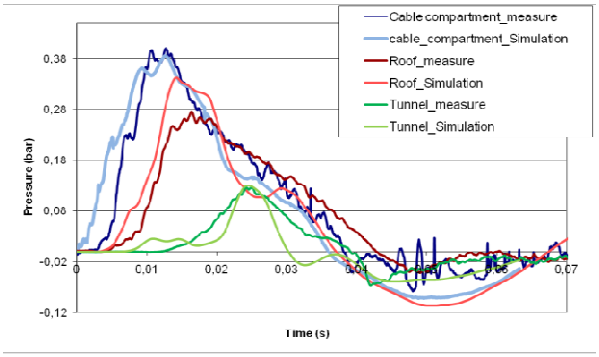

Figure 2: Pressure measurements and CFD results, 1st example.

From Figure 2, it is observed that in the arcing compartment, pressure reaches its peak in about 10ms, which is the rise time of the standard arc power curve. This creates a wave which expands in all directions of space at sound speed (0,3 m/ms). The magnitude of this wave decreases in further compartments, and tends to zero when approaching to the panel exhaust (where relative pressure is zero). The rate of decrease becomes similar between the sensors and is controlled by the size of the panel vent. The small negative pressure following the overpressure stage is typical of duct exhaust.

One can conclude that for medium voltage AIS compartments smaller than 1m, the pressure can be almost uniform in space, depending on the panel exhaust location and size. Indeed, the pressure wave crosses such compartments in less than 3ms, and wave reflection is not the main phenomena.

Merging the four criteria of the three pressure sensors, the averaged accuracy for this particular test comes to 7%.

Example of an internal arc within an epoxy switch.

The same AIS range studied above uses a SF6 switch made in a sealed epoxy vessel, which incorporate a valve opening at 4bars overpressure. The pressure development is different from the previous example, as shown in Figure 3.

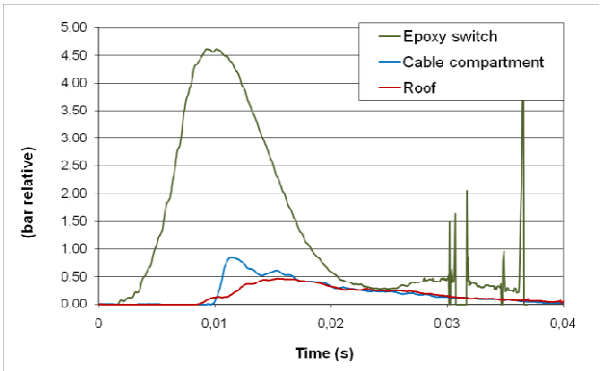

Figure 3: Pressure measurements, epoxy switch fault.

As in a GIS, during a first stage the pressure rises in the arcing compartment only, this one being closed (no flow). The overpressure in this compartment reaches typically several bars, while the peak is controlled by the valve bursting pressure and area.

In the rest of the switchgear, the rise of pressure is the consequence of the valve opening, and of the gas flow throughout the valve, the order of magnitude being 5 to 10 times lower. So the decrease of pressure of the arcing compartment has to be accurate enough, otherwise the comparison for the other sensors can be compromised.

CFD pressurization results are given Figures 5 and 6):

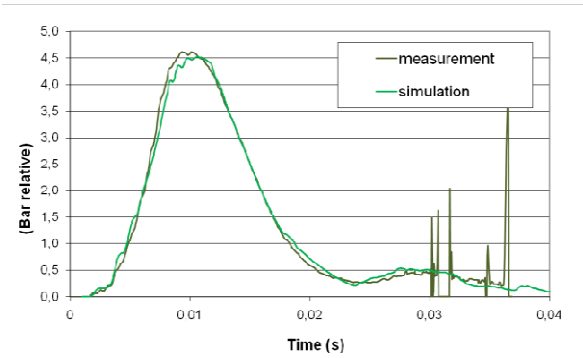

Figure 5: Epoxy switch pressure: measurement and CFD result.

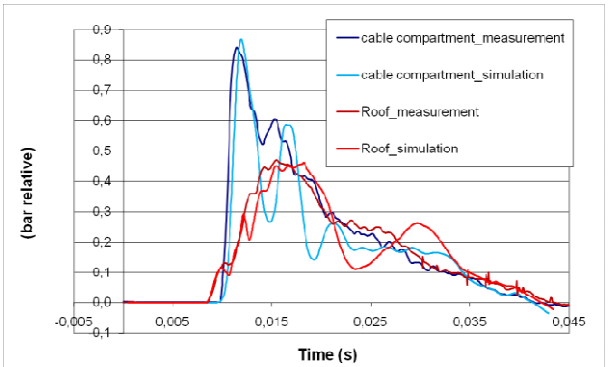

Figure 6: Pressures at two sensor locations: measurements and CFD results.

The remarkable point is the rate of rise of the cable compartment: the peak is reached in 2ms (6ms for the roof sensor). This is well reproduced by the CFD simulation, which total accuracy is in the order of 1%. The post-processing shows a wave reflection against the cell front door and floor, with a huge, transient and localized pressure peak. It also shows the "punch effect" in front of the valve itself.

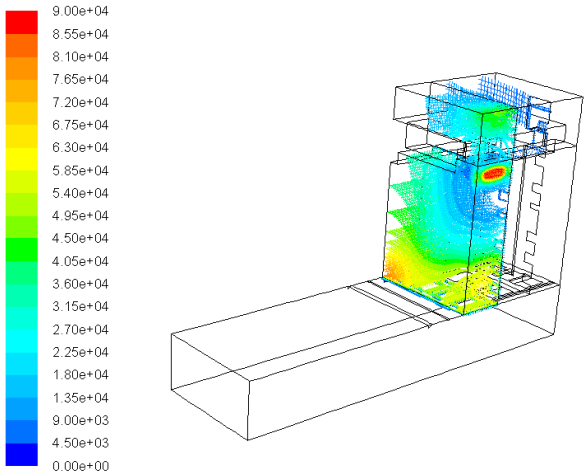

Image 2: Pressure field view at peak pressure instant of cable compartment sensor (rear face).

The flaps on cell floor are still closed – they start to open some milliseconds later.

Lessons learned – important parameters in pressure calculation

This process of accuracy evaluation has been carried out on several test shots, for switchgears representing primary and secondary AIS, as well as secondary GIS and switchgear rooms [1]. In general, the accuracy is always better than 10%. The main lessons are the following:

- Even for identical tests, the arc power actually varies within +- 10%. Therefore, it would make no sense to predict test result with a lower accuracy.
- Precise modeling of inner equipment within the compartment is not required. Such equipment usually takes a volume less than 10% of the total volume, and this will not have a significant impact on the result.
- The actual arc power curve is main factor, especially for GIS. Indeed, discrepancies with formula using constant arc voltage are often too important, leading to inaccuracy.
- Proper modeling of valve and flaps is key. They can totally tune the result. Flaps take 10 to 20ms to open (fully).

- Venting areas play also a main role. If they are made of grids, their model must be properly defined.

Special focus of the valve explosion : the transient non-uniform pressure stage

The case of the fault within the epoxy switch illustrates that:

- There is a "punch effect" in front of the valve (here on the rear side of the panel), of a high magnitude. This is due to the fact that there is a jet of gas, localized in space.
- The valve explosion, which is very sudden, launch a pressure wave that rises faster compared to a standard AIS wave. This wave reflects against switchgear dead-ends; generating local high pressure peaks.
- It takes almost 10ms to damp such wave, so that the pressure becomes uniform in the switchgear – except at the front of the valve.

For such cases, it is then necessary to record the full history of the pressure field both in time and space, in order to be representative of the pressure load.

COUPLING BETWEEN FLUID AND STRUCTURAL SOLVERS

One-way or two-ways coupling?

A Two-ways coupling would modify the pressure calculation according to the increase in volume due to the displacement of the enclosure. Practically, such displacements are limited to a small extent, in order to avoid the structure collapse. The corresponding increase in volume is lower than 10%, a level which does not influence significantly the pressure.

A One-way coupling is then relevant: pressure development is calculated first, then exported to the mechanical solver. Doing so, models are simpler:

- Geometries and meshes can be different in both software, as mesh mapping routines already exist.
- Time steps are managed separately by each solver.

The coupling methodology we developed uses a data file, containing the pressure field history, which is exported by the fluid solver, then imported by the structural solver as pressure loads for given discretized times. It contains:

- The coordinates X, Y Z of the faces of the Fluid mesh.
- The pressure value for each of these faces, at given instants of time.
- In a separate file: all instants of time, at which the pressure field has been exported.

In the structural model, the pressure load is imported, and mapped spatially on the structural mesh. One pressure load is automatically created for each pressure column. A given time is associated for each of them. The software interpolates the pressure value between those known pressure loads, in order to compute a full transient analysis.

Time-step management – implicit or explicit solvers?

Fluid solver

Because of the high rate of change in the plasma area, explicit solver is required. Time stepping is then managed by the solver itself, based on a courant number. Typically, it is in the order of 10^{-6}s.

Structural solver

Explicit solvers are suitable for such high-speed loads, but they are more complex to handle. Especially, they require a lot of care in the mesh preparation, as small or bad elements would lead to a huge increase of computing time.

In order to keep all required detail in the enclosure mesh, especially around the bolts which are stressful areas, implicit solver has been used, associated with time steps in a range 10^{-5}s to 10^{-4}s.

Pressure field up-date

The measurements show that at a given point, the pressure goes from 0 to the maximum in 2ms – and even less in the neighborhood of valves. So an update of the pressure field every 0,2ms at least is required, 0,1ms being better.

On the structure side, the movement is much slower. Typically, the largest displacement is observed 20 to 40ms after beginning of the pressure rise. So in the end, an up-date of the pressure field each 0,2 ms is enough.

STRUCTURAL PART – EXAMPLE OF AN UPPER CABLE BOX

The internal arc withstand of a cable box, installed on the roof of the cell studied above, is assessed by simulation. The steps are the following:

- The additional volume is modeled in CFD, and pressure field are derived again for the epoxy switch fault (the most severe one)
- The pressure field obtained on the cable box walls is exported each 0,2ms by a routine.
- The cable box withstand is assessed by a transient structural analysis, which uses the

pressure field calculated in CFD as an imported load.

- Stresses in the structure, including screw and rivets, are compared to the material limits.

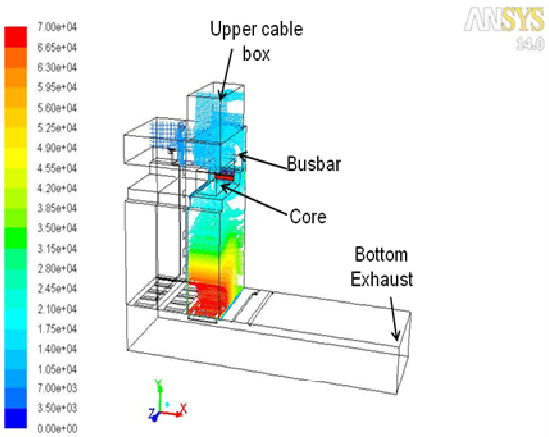

Image 3: Pressure field view calculated in a switchgear of similar design (front face).

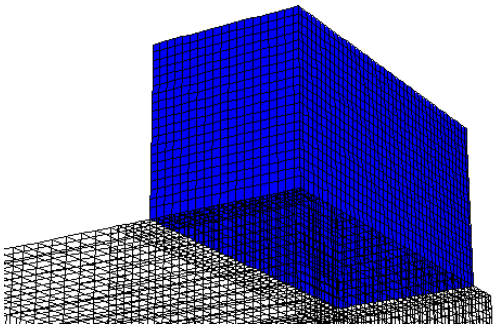

Image 4: CFD model mesh, view of outer surfaces for which pressure values are exported.

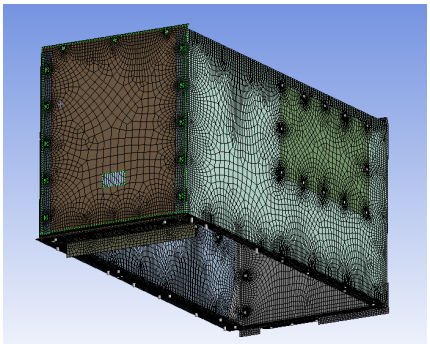

Image 5: Structural model mesh.

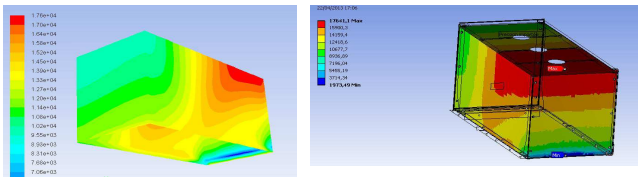

Image 6: Pressure field at a given instant, calculated in CFD (left), and mapped on structural mesh (right).

Main points of attention in the structural analysis

Non-linearities must be considered:

- Large displacement
- Steel plasticity

Contacts should be modeled. They are often tricky to define. It is a conservative way to ignore them and assemble all structural parts by beams to represent the bolts at their right location. By doing so the load is transmitted directly to the beams for sizing.

Structure damping is an important factor and shall be clearly stated. Constant 5% damping is often used for our applications.

All masses must be modeled, as inertial effects are of major importance in such a transient phenomena. Doing so, all eigenfrequency contributions are taken into account.

At least, the simulation duration shall be long enough, to reach the most stressful instant, which occurs always far later than the pressure peak. The structure continues to move even after the pressure has gone back to zero. A typical time for structural analysis is 100ms.

Convergence issues

Buckling may appear locally and can be detected by reviewing the solution residuals.

Local singularities will appear at each node, where a jump in stiffness occurs – around bolt holes for instance. Those nodes will give non-significant results in the post-processing, and are often responsible for non-convergence. It is then recommended to carry the resolution without them.

REFERENCES

[1] CIGRE Working Group A3.24, 2014, "Tools for the Simulation of the Effects of the Internal Arc in Transmission and Distribution Switchgear", CIGRE technical Brochure 602

[2] C. Besnard, 2009, "Internal arc simulation in MV/LV Substations", CIRED 20th International Conference on Electricity Distribution

[3] P. Chévrier et J. Maftoul, 1993, "State law equation of a real gas and simulation of electrical arc/gas flow interaction ", *Journal of Physics.* D: Appl. Phys. 26 949.