OPTIMIZING INVESTMENT STRATEGIES ON NETWORK'S CAPACITY GROWTH FOR FACILITATING LARGE SCALE INTEGRATION OF ELECTRIC VEHICLES

Sharmistha BHATTACHARYYA
Endinet – The Netherlands
sharmirb@yahoo.com

Angelo van BUUREN
Endinet – The Netherlands
angelovanbuuren@gmail.com

Björn JANSON
Alliander – The Netherlands
bjorn.janson@alliander.com

ABSTRACT

Electric vehicles (EV) are becoming increasing popular among the residents of the Netherlands because of their environment-friendly operation, driving comfort & encouraging governmental policies. The Dutch government supports 'eco-friendly' transport programs that focus on environmental policy such as reducing CO_2 emissions. EVs have zero-emission. Until the end of 2014 there are around 45.000 electric cars registered in the Netherlands. The government has an ambition to reach 200.000 EVs target riding on the Dutch streets in 2020 [1]. It means that a sufficient electrical charging infrastructure needs to be implemented to facilitate the increasing load growth for EVs. Some pilot projects are already in progress to support this action plan. Endinet, as a network operator, is also participating in such projects and is building electrical charging points in its service area. Also, network simulation is done to investigate the bottlenecks where network modification is needed in the near future. From the simulation results, an optimum solution is suggested for a typical mesh connected low voltage network that can maximize the societal benefits with minimum network investments.

INTRODUCTION

The 'Energy Agreement for Sustainable Growth' contract was signed in 2013 by more than forty organizations in the Netherlands to support each other and work together for a robust, future-proof energy and climate policy. Electro-mobility & transport is one of the main attention areas in that energy agreement contract. Various companies, social institutions, knowledge centers, and national, regional, and local governments are working together to accelerate the growth of electric driving and to capitalize on its economic opportunities. The number of electric vehicles (EV) in the Netherlands has grown appreciably in the past years, as indicated in Fig. 1. Since 2012, the rise of plug-in hybrid car models and electric cars employing range extender technology has contributed significantly to electric vehicle sales in the Netherlands. These models are very popular among lease-car drivers. The number of companies active in the sector is also increasing. This growth in commercial activity is particularly visible in the areas of vehicle manufacturing, propulsion technology, charging infrastructure, and services [2]. Some pilot projects are started in different provinces in the Netherlands to visualize the impacts of large scale electric charging on electricity networks. In this paper, a brief summary is given on various national level activities related to EV. Also, different EV charging scenarios are described that are further utilized in the simulation model to understand their impacts on an electricity network.

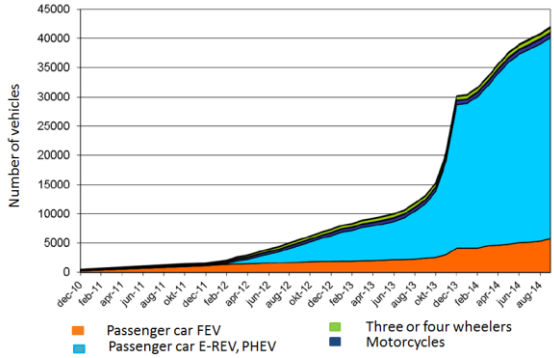

Fig. 1: Growth of EVs in the Netherlands [3]

Endinet is a distribution network operator in Eindhoven, a city in the Netherlands where a high growth of EV is forecasted in the coming years. Endinet is participating in various regional activities to build-up EV charging stations and required infrastructure in its service area. When many customers use EVs and charge their batteries simultaneously, it will change the normal load flow profile of the network. The charging may take place at home, in office areas or at public places (such as streets, shopping complex, etc.). Moreover, the charging load may vary depending on charging power and number of charging points at a specific location in the network. Also, the charging time may coincide with the natural peak hours of the day (for example in the evening when electricity demand is at its peak). All these factors might cause large amount of network losses in the cables, overloading of network components, and voltage quality problems. On the other hand, there will be several hours during the day when load demand is very low because of minimum amount of EV charging loads. Under such conditions, the network assets will be highly under-utilized. Hence, the main challenge for a network operator is to design a grid which optimizes load demand and utilizes the network assets optimally. A careful network design can defer grid investment requirements for years. Smart charging policy can also be introduced (against a dynamic energy tariff scheme) to make it technically and financially attractive both for the customers and also for the network operator.

In this paper, a part of Endinet' s network is modelled in software tool Gaia and various scenarios are simulated to determine the possible bottlenecks in the network from capacity & voltage quality point of view. Furthermore, the optimum scenario will be suggested that can maximize the societal benefits from technical as well as economical point of views.

NATIONAL LEVEL ACTIVITIES ON EV

In the Netherlands many cars are driven daily for a short distance only (<30 km one-way). Therefore, EV represents a good fit to meet Dutch transportation needs. The Dutch government has set a national target of 200.000 electric vehicles in 2020 and 1 million cars by 2025. The government considers the following benefits of driving EVs in favour of public interest [2]:

- Improved energy efficiency and saving power
- Contribute to a clean environment by reducing CO_2 emissions.
- Improvement in quality of life in cities because of lesser NO_x emissions and fine dust particles
- Less dependence on fossil fuels
- Create employment, boost economic growth

As per the energy agreement contract, public and private parties will make agreements to stimulate the realisation of public charging infrastructure for EVs. The number of charging stations is steadily growing. In addition to the public and semi-public charging points that are easy to monitor, there are private charging points. In the Netherlands, there are approximately 0,8 charging stations per vehicle [4]. According to European guidelines, this must increase to 1,0 per vehicle. In addition, the guidelines require a minimum of 10 percent publicly accessible charging points. The government is signing a 'Green Deal' with the initiators of sustainable projects and ideas. Several Green Deals have been signed for electric driving. The objective of this deal is to realise nationwide 10,000 intelligent charging points and 100 fast-charging points at private but publicly accessible locations (garages, parking lots, retail and restaurant locations, filling stations, and so forth). The development of the above activity until March 2014 is shown in Fig. 2 [4].

Charging point type	# installed in the Netherlands (March 2014)
Regular Public (24/7 publicly accessible)	3,698
Regular Semi-public (limited publicly accessible)	3,873
Private	19,000
Fast charging (Public and Semi-public)	70
Total	**26,641**

Fig. 2: Number of charging points until March 2014

The "E-laad" consortium is formed by the regional Dutch grid operators that assist the communities with local action plans for electro-mobility. In 2014, the organization E-Laad is divided in two parts: 'EVnetNL' and 'ElaadNL'. The organization EVnetNL is mainly responsible for operation & control of public charging stations; whereas ElaadNL is acting as a knowledge and innovation center in the area of charging infrastructure. ElaadNL is also responsible for coordinating the connection of various charging points in the network, on behalf of the regional network operators in the Netherlands [3]. Another issue related to connection of an EV charging point is safety of operation. Proper earthing of the charging station is very important to assure public safety.

Furthermore, special tax rules are also applied for EVs such as an exemption of yearly road tax. The various tax exemptions from the national and local governments are summarized below [4]:

- Exemption from vehicle purchase tax (registration tax exemption until 2018)
- Exemption from vehicle circulation tax
- Lower surcharge on income taxes for private use of company cars (a benefit of approximately € 2,000 annually)
- Tax deductible investments (under the MIA tax relief scheme, around 19% of the investments on EVs are exempted from tax)
- Environmental investment rebate (up to 36 percent of € 50,000 maximum)

ENDINET'S ROLE AS DISTRIBUTION NETWORK OPERATOR

The role of Endinet as distribution network operator in the EV charging infrastructure market model is indicated in Fig. 3 [5].

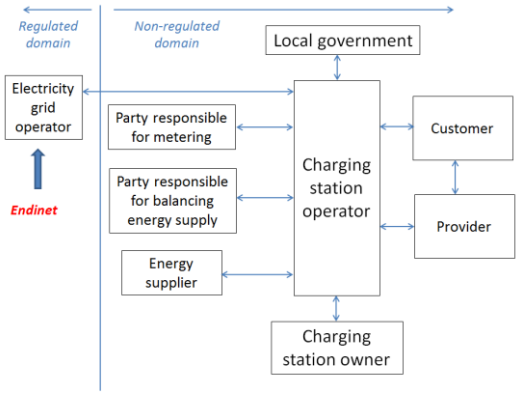

Fig. 3: New market model in EV charging infrastructure

Endinet is the owner of 10kV medium voltage (MV) and 400V low voltage (LV) network in the city Eindhoven, the Netherlands. Endinet has a mesh connected low voltage network that enhances the reliability of network service by allowing the load current to flow in a feeder through more than one route.

A network operator also needs to guarantee a supply voltage at a customer's terminal that meets the requirements of the European standard EN50160 [6]. When a client asks for a network connection, the network operator is obliged to provide it. If many customers in a neighborhood ask for double connections or higher capacity connections, the network operator probably needs to modify the main grid. Building an optimum network infrastructure requires careful engineering and strategic planning as large investments are involved.
The city Eindhoven is located in the province of 'Noord-Brabant' in the Netherlands. The province had a plan to install 600 new public charging stations in 2014 and 2015, and is working with regional network operators Enexis and Endinet. In total, the province plans to realise 3,000 public charging points.

CHARGING POSSIBILITIES

To charge an EV battery, three types of charging are possible: 1) very fast charging in public places (>50kW charging load); 2) standard charging in public places (4-11kW charging load); 3) slow charging at home (<3.5kW charging load).

For fast charging, a bigger connection capacity (>3x80A) is needed and in most of the cases grid connection is realized through an MV cable and a local MV/LV transformer. This type of load can cause voltage quality problems in the network if it is not designed carefully. In contrary, the standard charging in public areas can be done by using a 3x16A or 3x25A connection capacity. The cost of this type of connection is generally paid back by the users. Also, the heavy load can cause higher network losses in the network. The slow charging at homes can be done by a 1x16A capacity connection. This type of connection may cause voltage unbalance in the network. It also changes the normal load profile of the customer.
Using the electrical grid for charging EV batteries is technically feasible, but some issues still need to be resolved such as the limitation of battery capacity, infrastructural limits, safety of connections, and the impacts on electrical load demand in the network.
The infrastructure for charging EVs is starting to get well organized in the Netherlands. Private and public parties are creating an open and competitive market model (as shown in Fig. 3) for the development of the EV charging infrastructure. National level agreements are made on interoperability, corresponding to European standards. Many charging systems in use in the Netherlands have been interoperable since the beginning of 2011. On the other hand, fast charging stations are being rolled out along the Dutch highways to provide EV charging infrastructure for the people. Until December 2014, total 254 fast charging points (public and semi-public) were installed in the Netherlands [7].

When many customers in a neighborhood start charging their cars simultaneously, the load demand will be much higher than the normal demand. In such a situation, it will be a real challenge for a network operator to optimize the network's capacity whilst minimizing social costs, without compromising the voltage quality.
It has been observed that slow charging is quite feasible in the Dutch society. Many cars drive only for a short distance and stand still for the rest of the day. However, people have a natural tendency to charge their cars in the evening as soon as they come back home from work. Therefore, an evening peak is observed when the load demand is maximum, as shown in Fig. 4. Three different scenarios are shown for 2030 as compared to 2010: a) normal load without EV, b) middle growth of EV (penetration level 13%), c) high growth of EV (penetration level 33%) [5].

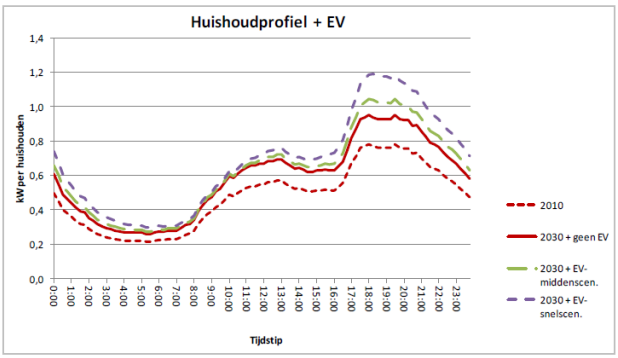

Fig. 4: House load profile with different scenarios of EV

The above charging profiles are used in this paper for network simulations described in the following section.

NETWORK SIMULATIONS

Two case study simulations are discussed in this paper. The first one with slow charging at household installations and the second case with standard charging at public places. For both the cases, the following philosophy is applied. In a meshed network, the cables are typically loaded up to a maximum of 50% of the rated capacity, considering the philosophy of network's operational reliability. With the connection of many EV charging loads at customer's installations or in public areas such as streets, the voltage profile and current loading in the network will be changed. According to the EN50160 standard, voltages (every 10 minutes r.m.s value) at different node points should be limited to ±10% of the nominal value for 99% of the operating time. Moreover, the minimum value of voltage at a customer's installation is to be restricted to U_n-10% for 100% of the operating time, where U_n is the nominal supply voltage.
In addition to the above voltage limits, all cables and station transformers loading should not exceed their nominal rating to avoid thermal damage and reduction of their operating life-span.

Slow charging case study

From Fig. 4 it can be seen that the maximum demand of a household will be 1,2kW in a situation with high EV penetration. This load is taken for each household in the simulation model. With such large number of single phase loads in the network, the chance of voltage unbalance will be higher. A part of the LV network is simulated in Gaia software tool (manufacturer 'Phase to Phase', the Netherlands) and various connections to different households from transformer stations are shown in Fig. 5. It is considered that there are equal number of houses in each phase, so that it can represent a balanced load condition.

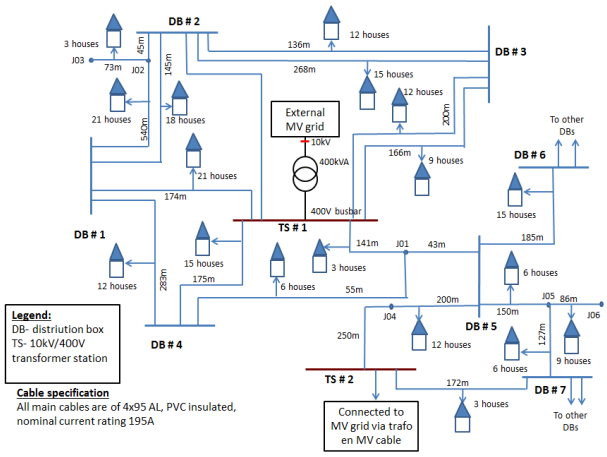

Fig. 5: Network used for simulation in Gaia

In a real situation, all the households might not charge their EVs simultaneously. This might cause unbalance of loading in different phases of a cable. On the other hand, some neighborhoods might have higher load demand than average and can cause overloading of network cables and transformers.

Presently, it has been noticed that Endinet's LV networks (especially new neighborhoods') are designed in such a way that the cables have a maximum loading of 25-30% during peak demand condition. Also, a mesh connected LV network provides better reliability and lesser voltage distribution problem. Therefore, it is expected that the future load growth until 2030 should not cause any capacity problems. However, some radial configured cables and old station transformers in some neighbourhoods need to be monitored continuously to check their status during the above load growth condition. Table 1 summarizes the loading of various main LV cables as found from simulation. Fig. 6 shows the voltage profiles of various node points of the simulated network.

The maximum loadings of transformers are around 57% of the rated capacity, whereas the maximum loading of a cable is less than 40% of its rated capacity. It indicates that the considered network has enough capacity to allow large scale slow charging at different household installations.

Table 1: Simulation results for high EV load condition

From	To	Losses in cable (kW)	Percent loading (%) under high EV penetration at homes
TS1	DB1	0,47	37
TS1	DB4	0,25	27
TS1	J01	0,32	26
TS1	DB2	0,46	34
TS1	DB3	0,23	25
DB5	DB6	0,23	25
TS2	DB7	0,61	33
TS2	J04	0,35	20

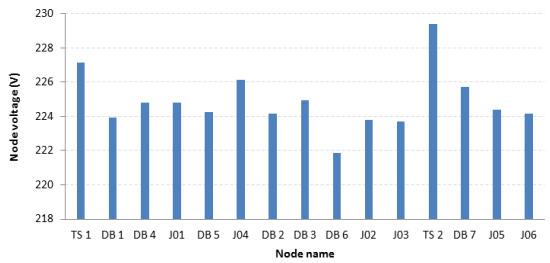

Fig. 6: Voltage profile at various nodes under slow charging condition at homes

Standard charging case study

In the same network of Fig. 5 it is assumed that at least one charging station is present at every street (as per 10% regulation described before). Each charging station has two charging points, each of 9kW maximum load. It means that two cars can be charged simultaneously at each charging point and has a total load of 18kW. In the simulation it is assumed that each house also has its own individual charging load too. The voltage profiles at various node points of the simulated network are shown in Fig. 7. It can be noticed from this figure that all the voltages at different node points are still above the minimum voltage limit of 207V as per the EN50160 standard. Hence, no under voltage problem is observed for the simulated network.

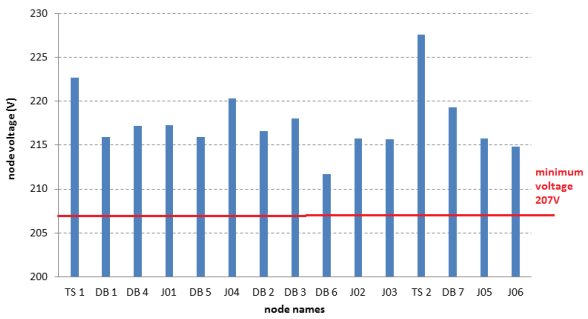

Fig. 7: Voltage profile at various nodes under standard charging at streets & slow charging at homes

From the simulation, it is found that the maximum loading of a cable in the network is more than 70%, whereas one of the connected transformers is overloaded by approximately 130%.

As per Endinet's design rules for a meshed connected network, the cable loading should be restricted to 100% and transformer's maximum loading in a residential neighbourhood should be limited to 70% of its nominal rating. Hence, it can be concluded from the simulation results that network investments are required to cope up with the considered EV charging load growth.

OPTIMIZING INVESTMENT STRATEGY

Simulation results show that large scale EV charging at households in combination with standard charging at public places (streets) can cause network congestion and overloading of network components. To manage the above, three types of actions can be taken:

- ***Traditional action***: such as incorporating higher capacity transformer; implementing higher rated cables or placing similar rating parallel cables. Sometimes, a small change in network configuration such as changing the position of a network opening can also solve load congestion problem. On the other hand, placing a storage system or extra decentralized production units in the network can also solve network congestion.
- ***Corrective action***: restricting charging load by controlling customer's load demand, switching off some loads in the feeders by load shedding, etc.
- ***Preventive action***: encouraging customers to participate in demand side management program and using their loads more optimal (smarter use of energy), introducing flexible electricity contracts and a dynamic tariff system for the customers, placing local battery storage for a customer, etc.

By implementing one or more of the above measures, network congestion can be controlled and near-future network investments can be delayed. In the simulated network discussed in this paper, the congestion is not very high. Therefore, encouraging customers to use energy efficiently and charging their cars at lean periods of the day can solve the network overloading problem. Also, a dynamic tariff can be introduced to involve the customers more actively. It is also desirable to spread knowledge about smart charging and efficient use of energy among the customers to make the above measure successful.

CONCLUSION

In the first section of this paper, various national level activities related to EV charging infrastructure were described. Encouraging governmental initiatives (such as tax exemptions) influence the Dutch customers to buy EVs instead of normal cars. It is expected that under the high EV penetration scenario, approximately 33% of all vehicle owners will have EVs in 2030. It means that a suitable charging infrastructure should be available at homes and public places. At present, in the Netherlands, there are approximately 0,8 charging stations per vehicle. According to the European guidelines, this must increase to 1,0 per vehicle. With the increasing pace of EVs in the Dutch neighbourhoods, more numbers of charging stations need to be built in the Netherlands. Moreover, at least 10 percent of the charging points should be publicly accessible.

Endinet, as a distribution network operator, is also active to build charging infrastructure in its service area. Network simulation is done for a typical mesh connected LV network for two scenarios. It is found that under normal situation when only charging at homes is done, the network can supply the required load demand without violating network standard design conditions. However, when public charging at streets is also included, the network becomes overloaded. However, the voltages at different node points remain within the minimum standard value of 207V. To avoid network congestion and defer investments, it is recommended to introduce a dynamic tariffing system and smart charging policy in the networks. These options need to be carefully investigated to implement it successfully in the network.

REFERENCES

[1] The Dutch Government's Plan of Action- "*Elektrisch Rijden in de versnelling - Plan van Aanpak 2011-2015*", downloaded from the website of the Dutch government (Rijksoverheid) http://www.rijksoverheid.nl/documenten-en-publicaties/richtlijnen/2011/10/03/bijlage-2-plan-van-aanpak-elektrisch-vervoer-elektrisch-rijden-in-de-versnelling.html .(in Dutch language)

[2] Holland-Pioneers in international business, "*Electromobility in the Netherlands – Highlights 2013*", downloaded from the internet website: http://www.nederlandelektrisch.nl/ (last visited on 4 January 2014).

[3] ElaadNL – Jaarplan 2015, "*Samenwerking van netbeheerders aan slimme laadinfrastructuur voor elektrische auto's*", (nadere invulling businessplan 2014-2018), versie 1.0 concept, November 2014. (in Dutch language only)

[4] Holland-Pioneers in international business, Factsheet, "*E-Mobility in the Netherlands*", published on March 2014, more info on: www.nederlandelektrisch.nl/english

[5] Rik Luiten, Movares Energy, "*Laadstrategie Elektrisch Wegvervoer*", a project of Netbeheer Nederland (project group Smart Grid), January 2013. Ref.: IN131171/EN-RL-120022359.(in Dutch language only)

[6] European Standard EN50160 (2010) -"Voltage characteristics of electricity supplied by public electricity networks", CENELEC, Brussels, Belgium, July, 2010

[7] The Dutch Government Information on EVs, "Cijfers elektrisch vervoer (t/m 31 December 2014), published by Rijksdienst voor ondernemend Nederland, January 2015, Downloaded from the website: http://nbn-assets.netbeheernederland.nl/p/32768//files/2014_cijfers%20elektrisch%20vervoer%20tm%20december%202014.pdf