VOLTAGE PROFILES ON LV RESIDENTIAL FEEDERS WITH PVEG USING A PRACTICAL, PROBABILISTIC APPROACH

Ronald HERMAN C. Trevor GAUNT
University of Cape Town – South Africa
Hermantek@mweb.co.za ct.gaunt@uct.ac.za

ABSTRACT

Many two- and three-phase LV feeders are used to connect single-phase residential customers to the grid. Because these loads have a stochastic behaviour they are best described statistically and can be modelled well with the Beta PDF that includes both shape and dispersion. In a similar manner embedded generation can also be modelled with Beta PDFs. This paper describes how probabilistic voltage profiles of feeders with and without PVEG can be derived using a non-iterative statistical method and shows how the required statistical parameters may be estimated.

INTRODUCTION

A common practice in many countries is to connect residential customers to the grid via LV feeders. These may be single-phase connections to three-, two- and single-phase 400/230V feeders with a neutral wire. Decades of load research and analyses of residential data in many countries show that probability distributions of the loads at any time are skewed and have a relatively large variance compared to the means. Research in South Africa [1] suggested that a Beta PDF adequately described the statistical behaviour of residential load currents, including their skewness and finite positive range. It became clear that conventional methods of representing load as average powers were inaccurate when simply adjusted with correction factors and that a probabilistic method that could incorporate risk was more acceptable. However, probabilistic approaches based on Monte Carlo simulation are too slow for practical purposes.

In many countries voltage magnitude quality assessment on LV feeders is based on a 10-minute cadence so a national load research project in South Africa adopted 5-minute sampling to satisfy the Nyquist criterion. For over 20 years, more than 60 households per community were measured at various geographical and economic locations for at least one year at a time resulting in a large volume of data, from which it is possible to extract the period of maximum demand and the after diversity maximum demand (ADMD). To incorporate the statistical load data into a voltage drop calculation, a probabilistic method was developed based on the statistical moments of the Beta distributed load currents, with parameters α, β and C [2]. This became known as the Herman-Beta (H-B) method and is the basis for South African design standard SANS 507 [3].

There is now a concerted drive worldwide to include renewables as embedded generation on LV feeders. Currently the major emphasis is on photo-voltaic embedded generation (PVEG). The existing H-B method was adapted to include any form of EG as Beta distributed currents modelling negative loads [4]. Instead of voltage drop under the most heavily loaded condition the analysis of an LV feeder with PVEG results in voltage rise when PV output is high and daytime loads are low. In this paper we address some of the difficulties in estimating the statistical parameters of the loads and the generation when these are not widely available.

STATISTICAL MODELS FOR LOADS AND PVEG

Stephen *et al.* [5] highlight the problem of residential load variability and the consequent need to formalise accurate statistical models for enhanced load profiling. Based on their experience of the UK and Finnish practices, the lack of appropriately measured data is still an issue that requires attention. They refer to the roll out of smart metering as a possible solution. The problem, however, is the inadequacy of the smart meter data for voltage calculations because resolution of 30-minutes or 1 hour is too long. There have been several attempts to back-fit the measured data to shorter time intervals but these are unsatisfactory because the shape and dispersion of the distribution of residential loads of a community change with the time interval of the measurements, as shown in Fig. 1.

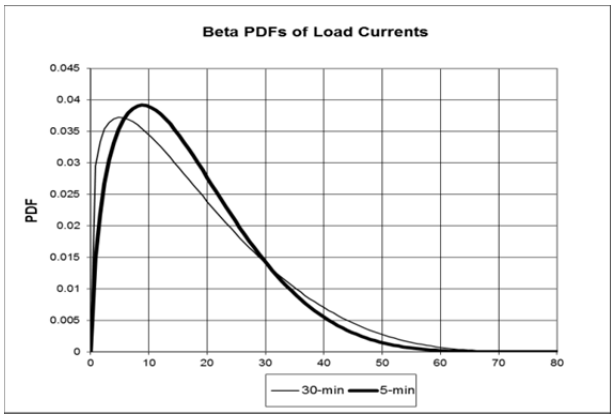

Fig. 1. Beta PDFs of load currents at maximum demand

Both curves in Fig. 1 are derived from load current data sampled at 5-minute intervals but a 30-minute moving average was used for the 30-min graph. Table 1 shows the difference in the Beta parameters.

Table 1 Effect of sampling rate

Sampling Interval	Mean [A]	Standard Deviation	Alpha α	Beta β	C [A]
5-min	17.448	12.828	1.228	4.404	80
30-min	16.974	11.11	1.627	6.04	80

It is evident from the measurements over 5 or 30 minutes that the mean and standard deviation values are different, as well as the shape parameters α and β. The voltage drop calculated with 5-min parameters will always be higher than using 30-min parameters, not only because the mean current is higher but also because the broader dispersion (indicated by the higher standard deviation) results in a higher possibility of larger unbalance between the phases. Therefore, care must be taken when using load data intended for energy-specific applications to calculate voltage performance in an LV feeder. It is also evident that voltage performance calculations based only on average values without considering dispersion lacks a significant parameter.

Research in Germany has shown that even when other PDF functions appear to fit the measured data better than a Beta PDF, the voltage drop calculations using MCS and the Beta PDF are more accurate than using the other PDFs, where the accuracy is determined by sampling from actual measurements [6].

An active feeder with embedded PVEG may cause the voltage to rise above nominal voltage at some nodes, especially when the embedded generation exceeds the passive loading. When the difference between the generation and the loading is a maximum the voltage rise might approach or exceed allowable voltage magnitude limits. Based on the residential load surveys conducted in South Africa this is most likely to happen during mid-summer at around midday. It should be emphasised that this light load is also characterised by high dispersion and a skew distribution. Fig. 2 shows the mean load current and PVEG profiles for a community in South Africa.

Fig. 2 also illustrates a typical PV output converted into amps at 230V. It is well known that the output is affected by season, clouds, temperature, pollution, tilt and orientation. It is generally accepted that a Beta PDF can adequately describe the variation due to these effects [7].

There is still a need to model the PVEG probabilistically from actual installations. For worst case voltage rise calculations, however, an approximate deterministic model can be used where the shape parameters are large and the dispersion is very small, e.g. α = 255, β = 255 and C = 2 × mean.

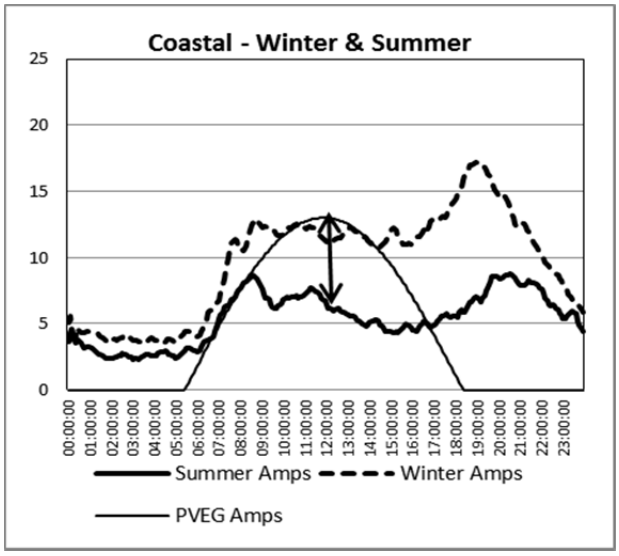

Fig. 2 Load profiles for winter and summer loads

ANALYTIC PROBABILISTIC APPROACH

Voltage drop calculations on an LV feeder with stochastic residential loads can be done probabilistically and analytically using the H-B method referred to in the introduction. The method has already been described fully [3, 4, 8] and the details are not repeated here. However, the advantages of the H-B method are:

- The algorithms are linear and do not require iterations, and they model correctly different types of loads and unbalanced load conditions on two- and three-phase feeders
- The method is not based on Monte Carlo sampling, so it is almost instantaneous in speed
- It has been rigorously verified using MCS

Conti *et al.* [9] have shown that it is not possible to achieve a realistic evaluation of where overvoltage (in accordance with the European Standard EN 50160) may occur by simply using traditional deterministic analyses. They make a case for using MCS in a probabilistic sampling process that uses a PDF as the basis for the statistical distribution. By rearranging the algorithms it was shown by Gaunt [4] that the original H-B method could be modified to include DG while retaining all the advantages listed above. Principally, this was done by regarding the PVEG as negative loads. Beta distributed load currents and details of the modifications are described in a paper that has been submitted to a journal.

An important feature of a probabilistic approach is the inclusion of a level of confidence, or conversely a level of risk. A 10% risk that the voltage drop is greater than the calculated value, or that the voltage is even lower than the limit value, is often adopted with passive networks. To translate this to voltage rise calculations, an equivalent risk value in the H-B method would be that

90% of voltages are below the calculated value. This is diagrammatically described in Fig. 3.

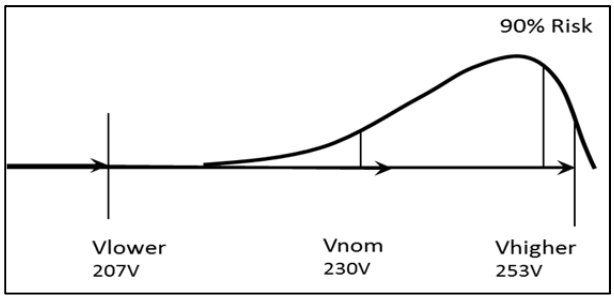

Fig. 3 Risk of over-voltage

ESTIMATION OF PARAMETERS

Adapting the H-B approach to conditions where appropriate load and PVEG data are unavailable presents some problems. Currently the best that can be done is to examine correlations from the South African load research data and then estimate the approximate parameters of the target scenarios.

Two load conditions must be modelled for voltage drop and voltage rise profiles. The statistical description of these load conditions may be derived from appropriate load data. In both cases the Beta parameters, α and β need to be specified. These parameters can be calculated using the mean (μ) and standard deviation (σ) once the scaling factor for the Beta PDF (C) is defined, where:

$$\alpha = \frac{\mu(C\mu-\mu^2-\sigma^2)}{C\sigma^2} \qquad (1)$$

and

$$\beta = \frac{(C-\mu)(C\mu-\mu^2-\sigma^2)}{C\sigma^2} \qquad (2)$$

Estimating ADMD

ADMD is the characteristic after-diversity maximum demand, widely used for the design of passive feeders where voltage drop is the limiting factor. If not available from national or organisational guidelines or sampled measurements, the ADMD can be estimated from the data at the MV/LV transformer level.

It was found from the South African data that the coefficient of variation (γ) can be correlated with the ADMD [8]:

$$\gamma = 1.143d^{-0.412} \ldots (3)$$

where

$$\gamma = \frac{\sigma}{\mu} \qquad (4)$$

In (3) d is the demand in kVA, and both σ and μ are expressed in Amps.

These parameters can now be used in the H-B spread-sheet for calculating voltage drop in a passive feeder.

Estimating the amsd

When the probable voltage rise due to the presence of EG is to be estimated, we need to consider mid-summer conditions with characteristic light load coinciding with maximum output from the PVEG. In this paper this loading condition is referred to as the average midday summer demand (amsd). The South African load data base provides the required 5-minute data but these data might not be available in other countries. In the absence of appropriate load data the following procedure may be followed.

Data from several residential sites in South Africa and Namibia characterising high-end economic groups that might install PVEG have been analysed recently. It was found that the average ratio of ADMD/amsd was 3.95.

The coefficient of variation of the midday summer load (during the period 12:00 to 12:55) differs from that at the winter maximum load. As in the estimation of ADMD, it is assumed that a correlation exists between the coefficient of variation and the amsd. From the same set of analyses it was found that the COV (γ = σ/μ), was close to 1.0 during the midday summer time. We can therefore derive both α and β parameters using (1) and (2) with C the same as before. These parameters are now used in the voltage rise calculations.

AN EXAMPLE

The residential three-phase network shown in Fig. 4 is taken from design records and used as an example. The network consists of three-phase underground conductors including the section from the transformer (Vs) to node 1. For voltage profile calculations the most significant feeder section is: Vs – 1 – C – D – E with the most connections. The labelled boxes represent 12-way kiosks feeding the 230V single-phase residential customers. Conductor sizing was done according to the SANS 507 standard. The phase and neutral resistances of each of the four sections of the feeder plus a typical service connection from the last node are 0.0057, 0.0066, 0.0137, 0.0529 and 0.0262 Ohms/wire.

To perform the voltage rise calculations in the H-B spread sheet, the customers on nodes A, B and F are combined (according to phase) at the node labelled 1.

The 5-min load parameters shown in Table 2 were extracted from our site measurements for the community:

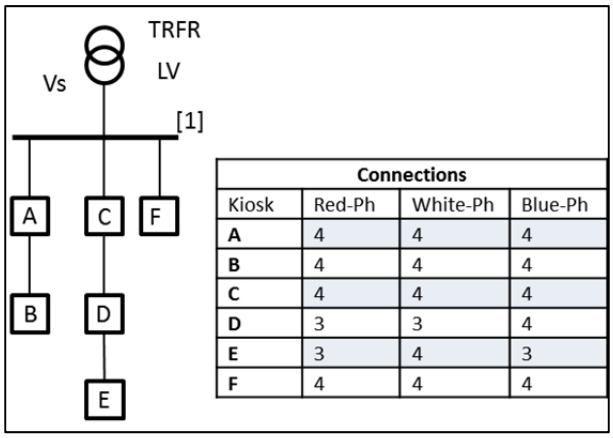

Connections			
Kiosk	Red-Ph	White-Ph	Blue-Ph
A	4	4	4
B	4	4	4
C	4	4	4
D	3	3	4
E	3	4	3
F	4	4	4

Fig. 4 Sample network

Table 2 Sample parameters based on measured loads

Load	Mean	Std.dev	α	β	C	γ
ADMD	17.448	12.828	1.228	4.404	80	0.74
amsd	5.336	5.863	0.706	9.884	80	1.1

For this investigation PVEG is limited to 80% of the maximum output of 5 times 1kW single-phase units per customer. The Beta parameters are chosen as α = 255, β = 255 and C = 2 × 3.48 A.

Two scenarios are investigated:

(a) PVEG on all nodes, supply voltage = 230V. This represents a feeder with lots of PVEG, of approximately the maximum demand load on the feeder in winter, so under lighter summer load conditions would generate significant reverse power into the MV system.

(b) PVEG on white phase only, supply = 230V. The total PVEG is only one third of (a) but extremely unbalanced.

The calculated probabilistic voltages for the two scenarios and adopting a risk of 10% are given in Table 3.

Table 3 Voltage results (from measured parameters)

Scenario	Red-Phase	White-Phase	Blue-Phase
(a)	237.16	243.82	237.8
(b)	227.04	251.53	226.8

Fig. 5 shows the voltage profile for scenario (b).

Notice that the unbalance of the allocation of PV to phases has caused the white phase to reach the upper voltage limit. In contrast, Fig. 6 shows the voltage profile for scenario (a) in which all the phases have equal PVEG.

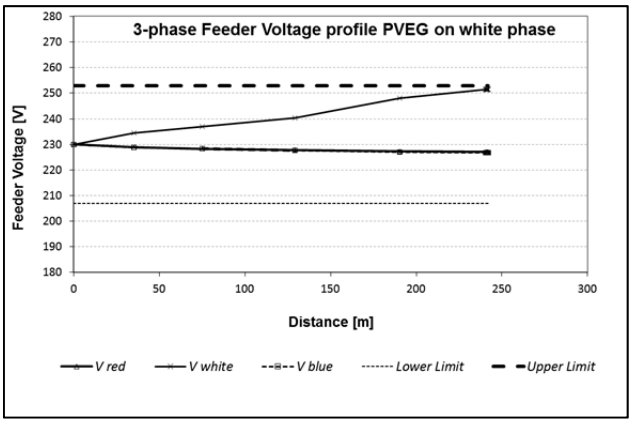

Fig. 5 Voltage profile of feeder with PVEG on white phase only

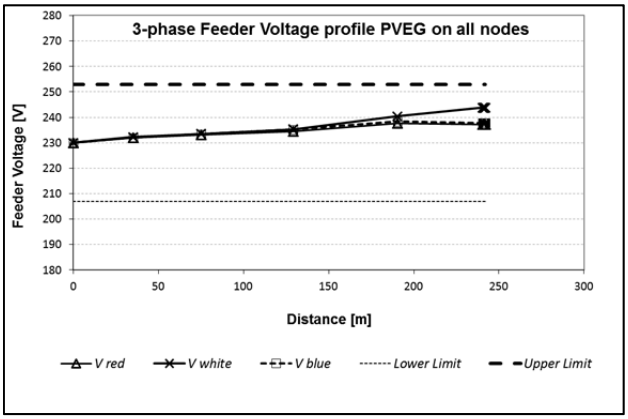

Fig. 6 Voltage profile of feeder with PVEG at all customers

These results are now compared with calculations derived from estimated parameters. For this purpose we will start with the ADMD of 17.448A at 230V, which is 3.49kVA. The coefficient of variation is calculated from (4) which gives the standard deviation. Then assuming the household circuit breaker size is 80A we can adopt this as the scaling factor C and determine the design parameters, α and β. To calculate the probabilistic voltage rise we estimate the amsd using the average ratio of 3.95 which gives 4.417 A, and with γ = 1 the standard deviation is also 4.417 A. The estimated parameters for the load are thus α = 0.89, β = 15.22 and C = 80 A. The three scenarios are recalculated with the estimated parameters and the results are shown in Table 4.

Table 4 Voltage results (from estimated parameters)

Scenario	Red-Phase	White-Phase	Blue-Phase
(a)	236.69	243.43	237.36
(b)	226.76	251.14	226.56

Comparing the results of Tables 3 and 4 it is evident that the differences are negligibly small – less than 0.5V on the critical phase.

DISCUSSION

The reverse power flow from the LV feeder into the MV network is about 277 A per phase with standard deviation of 28 A. This probability-based value is useful for assessing thermal rating and protection response.

The voltage rise for both scenarios was based on the source voltage Vs = nominal voltage. This may not be the case when the MV network is lightly loaded and the source voltage of the LV feeder could rise to, say, 1.03 p.u. With balanced PVEG across the phases at all nodes, the voltage rise would still be lower than the condition with a lower source voltage and the unbalanced PVEG of only one third capacity.

From Table 1 the results from sampling at 5-minute intervals indicates the mean is about 3% higher than at 30-min intervals and the COV is about 12% higher. These relationships might be used to adjust the 30-minute derived from AMI/AMR metering referred to earlier. The H-B method is based on load currents, so we need to convert the power data to equivalent load current at nominal voltage.

Voltage rise calculated using the H-B method and measured data agree well with results derived using estimated data.

The approach to estimating the parameters for loads and generation is based on data obtained for Southern African conditions where the ratio between the summer and winter loads has been analysed for ten communities. However, the validity of extending the corrections (5- and 30-min measurement) and ratios (amsd and coefficient of variation) for application in Europe and elsewhere still need to be tested using real measured data.

CONCLUSIONS

This paper has shown that appropriate statistical load data for both over- and under-voltages are crucial for calculating voltage drops and rises with or without EG. It has shown that the modified H-B method to accommodate EG on LV feeders is well suited for calculating voltage variation. The modified H-B algorithm is almost instantaneous, not requiring lengthy simulations, and is supported on a standard open-access spread-sheet platform.

REFERENCES

[1] R. Herman & J.J. Kritzinger, 1993, "The statistical description of grouped domestic electrical load currents", *Electric Power Systems Research*, 27 43 – 48.

[2] R. Herman & S.W. Heunis, 1998, "A General Probabilistic Voltage Drop Calculation Method for L.V. Distribution networks based on a Beta p.d.f. Load Model", *Electric Power Systems Research*, 46 45 – 49.

[3] SANS 507-1:2007, "Electricity distribution guidelines for the provision of electricity distribution networks in residential areas", ISBN 978-0-626-19171-9, Standards South Africa, Pretoria.

[4] C.T. Gaunt, R. Herman, G. Celli & S. Mocci, 2011, "MV and LV distribution feeder design using probabilistic approaches to load and DG", *Tutorial 5, CIRED conference*, AIM, Frankfurt.

[5] B. Stephen, A.J. Mutanen, S. Galloway, G. Burt & P. Järventausta, 2014, "Enhanced load profiling for residential network customers" *IEEE Transactions on Power Delivery* 29 88-96.

[6] A.C. Probst, Private communications.

[7] F. Youcef Ettoumi, A. Mefti, A. Adane & M.Y. Bouroubi, 2002, "Statistical analysis of solar measurements in Algeria using beta distributions", *Renewable Energy*, 26 47-67.

[8] R Herman & C.T. Gaunt, 2008, "A Practical Probabilistic Design Procedure for LV Residential Distribution Systems", *IEEE Transactions on Power Delivery*, 23, 2247-2254.

[9] S. Conti & S. Raiti, 2007, "Probabilistic load flow using Monte Carlo techniques for distribution networks with photovoltaic generators", *Solar Energy*, 81 1473-1481.