A HOLISTIC APPROACH TO POWER SYSTEM TESTING & VALIDATION

Erik C.W. DE JONG
DNV·GL – the Netherlands
Erik.deJong@dnvgl.com

Yin SUN
DNV·GL – the Netherlands
Yin.Sun@dnvgl.com

Hongzhu Daniel LIANG
DNV·GL – Singapore
Daniel.Liang@dnvgl.com

ABSTRACT

The active grid controllers, power electronics convertors and dynamic protection strategies being implemented in grids today, pose a new risk to the system by its complexity and intricate interaction alone. By extension it therefore also poses a significant challenge towards their testing and validation in order to reduce the risk to the system. This challenge can only be solved from a system perspective. This paper seeks a more holistic approach to the testing and validation process of such active systems applied within power systems, which combines the dynamic behaviour of the equipment under test with the overall power system response. Methods such as co-simulation and closed-loop (such as power hardware in the loop) and the evolution thereof is presented together with a case study on the validation approach of a complex protection strategy. Such testing techniques are seen as front-runners for future, independent, third-party, certification regimes for power systems.

INTRODUCTION

Although the main purpose of power systems have not changed over the years, the grids themselves, how they are operated, protected and what is expected of them today no longer resemble that of the grids of yesteryear.

Figure 1 Hierarchic grids are making place for distributed (smart) grids (source:DOE)

One prominent change is the integration of renewable (RES) and distributed energy resources (DER), which are already forming an integral part of modern power systems. Another undeniable change is the deployment of smart grid initiatives to balance local supply & demand, such as active distribution system management[1], often in microgrid configurations. Most of these resources are grid interfaced by means of power electronics, which alternatively also provide more flexibility and controllability to grid operations and in some cases even more resilience. The power electronics and many more active grid controllers – distributed, in the form of heterarchically managed agents[2]; or centralized – introduce a new domain into power systems, namely software based control. From a risk mitigation point of view the impact of these active grid controllers on the quality, reliability and availability of supply of the overall power system needs to be tested and validated for grid compliance as thoroughly as the equipment hardware itself is tested. When also considering the consequences for the various protection strategies it becomes unavoidable to take into account the system context. It is foreseen that such endeavors will require a more holistic approach to power system testing and validation. This paper elaborates on the current status and foreseen evolution as regards standardized, independent, third-party laboratory testing, validation and certification of power system equipment for grid compliance and highlights a micro-grid based, complex protection validation case study.

EVOLUTION OF TESTING & VALIDATION APPROACHES

Today the testing for grid acceptance of most grid components is performed on single components and in an open-loop manner. This implies that all boundary conditions required for the test are presented to the equipment under test (EUT) by a suitable laboratory facility and its sophisticated range of sources and all activities recorded by suitable measurement equipment. During the actual testing appropriate stimuli are introduced to or on the EUT (external voltage for dielectric testing; or increased short-circuit currents for mechanical integrity testing, for example) in order to excite specific component responses typically according to standardised methods[1], which in turn can be checked and validated against known values (a benchmark or predetermined behaviour). For the larger part of classical distribution and transmission components, the inner workings of the equipment (cables, switchgear and transformers, for example) are well known to the test engineers and testing procedures tuned to validate a number of vital parameters applicable to that type of equipment. Furthermore, as these components are predominantly passive

1 international standards such as ISO, IEC or IEEE

components the dynamic response of the system it is connected to is not pivotal in its functioning nor a barrier to comply with (type-) test certification requirements. In this case open-loop testing – testing that does not take into account the dynamic interaction between the EUT and the specific power system it is intended for – is sufficient to de-risk the equipment and declare it fit for purpose.

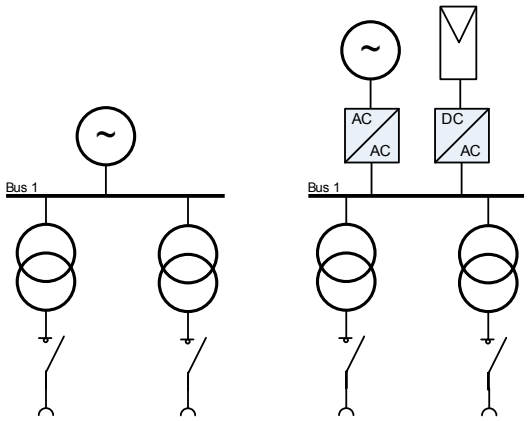

Figure 2 Changing testing requirements when changing from passive to active grid components

However, for active components, such as utility-interactive power electronic converters for DER, or complex protection devices, often comprising of an intricate system of systems, the dynamic interaction between the EUT and the specific power system it is intended for is crucial, whilst the inner workings of the EUT are often not known to the test engineers. This is due to the fact that the behaviour of such EUTs are largely independent of the hardware but rather heavily dependent on the control software behaviour. In this case open-loop testing will not adequately capture the level of detail, especially the dynamic interaction, required to be able to validate its behaviour, let alone certify compliance for grid acceptance in complex power systems. Introducing closed-loop techniques[3] that do capture the required level of detailed as regards dynamic interaction, would bring the certification and grid acceptance of such systems a step closer. Furthermore, due to the complex system behaviour dictated by the control software it is a challenging task to perform benchmark comparisons of different (protection) systems and create standardised test protocols.

A MORE HOLISTIC APPROACH

A holistic test & validation approach ideally combines the dynamic behaviour of the equipment under test (EUT) with the overall power system response. It could even span multiple domains. A feat not easily achieved within the confines of a single laboratory environment where power, bandwidth and even real-estate come at a premium[4]. Co-simulation and Hardware-in-the-loop (HIL) test & validation techniques aim to bridge this gap. HIL, for example, incorporates the dynamic behaviour of the physical prototype, including its controls and protections, with a realistic emulated power system response obtained from the extensive power system modelled in validated (digital) software models - running on a suitably fast (real-time) simulation platform - as schematically illustrated in Figure 3.

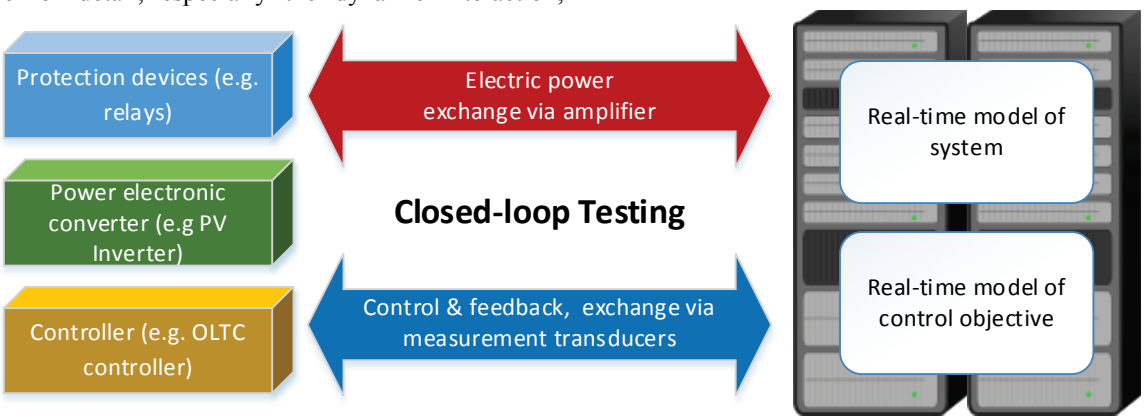

Figure 3 Schematic representation of closed-loop testing technique applicable to power system testing and validation

Such approaches are then not limited to only the electrical domain and could also be used in a multi-domain environment, combining for example mechanical and aerodynamic stimuli, as appropriate for wind turbine testing (pitch and power conversion) & validation for wind farm application, whilst respecting the individual timesteps and specific parameters for each of the domains. Embracing these methods as part of component and power system certification would be the next logical step towards reaching a more holistic validation approach.

Although such test & validation techniques have drawbacks of their own it offers the prospect of increasing the accuracy of validation by triggering more realistic responses from the EUT as part of a realistic larger system. It could even reveal system related aspects such as identify natural limits for the penetration of DER into particular distribution areas, control interaction amongst wind turbines in

wind farm or control interaction amongst distributed controllers or protection devices[5]. This is something that cannot be achieved by the testing of individual components in isolated tests. From a testing laboratory point-of-view, the simulation aspect offers great flexibility in designing and performing test scenarios. It can be changed easily and quickly without the need for hardware adaptations, (rewiring, etc.). Various experiments can be performed repeatedly with increased consistency and improved repeatability. Extreme conditions can be studied with minimum cost and risk, while hidden issues of the equipment can be revealed allowing the in depth understanding of the behaviour of the device under test. However, the stability of the closed-loop test circuits; interface characteristic and model dependencies on case specific parameters still pose a challenge to the widespread application of the method. Nevertheless, implementing such closed-loop testing techniques to validate sophisticated equipment operation and its protection in complex power grids will become unavoidable in order to ensure stable and reliable grid operation in future power electronic dominated grids. As an example of where a holistic approach to power system testing and validation is valuable, a case study is presented next, based on the complex protection strategy validation of an industrial power system with on-site power generation (could be DER) and an intertie link with the public utility as redundant solution to increase the plant availability.

CASE STUDY

To ensure a reliable power supply and high availability of equipment within critical manufacturing or production processes; large petrochemical, mining and metallurgy industries often incorporate on-site power generation (fossil fuel, DER or a combination thereof) in combination with an intertie connection to the utility grid, as shown in the simplified system overview in Figure 4. This can be seen as an extraordinary implementation of a micro-grid.

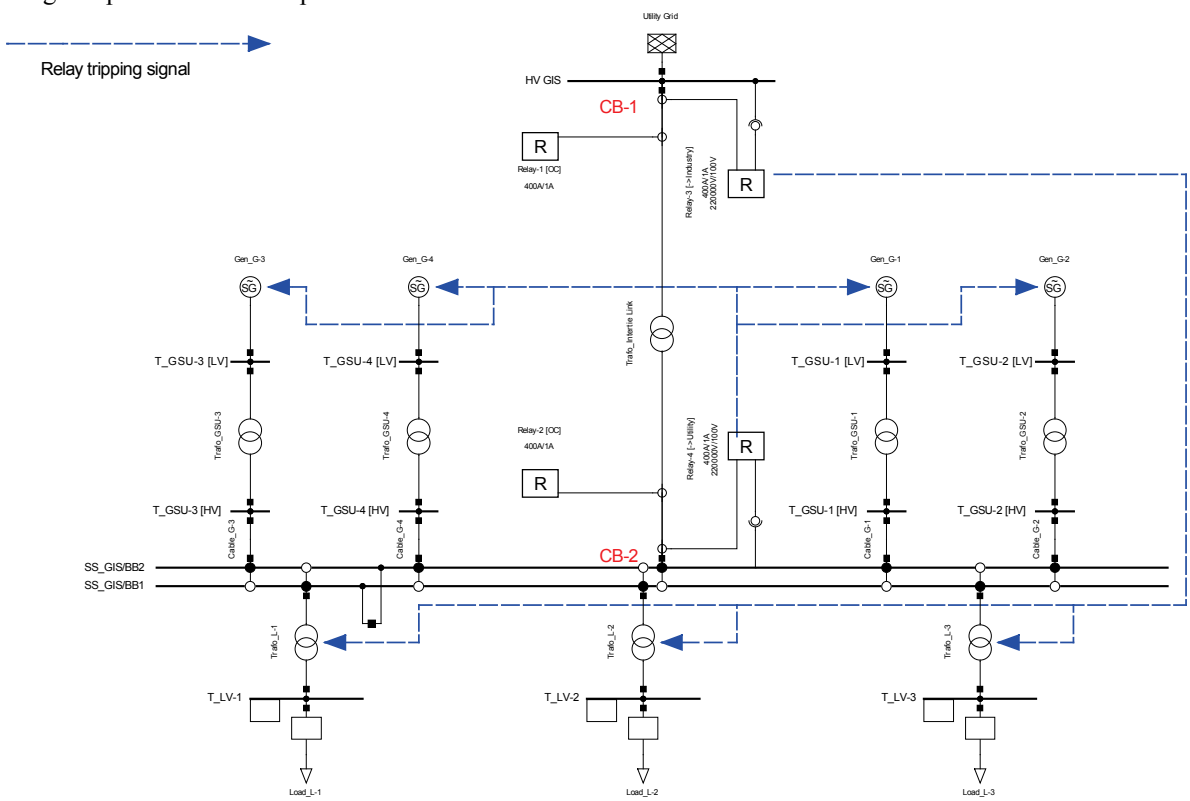

Figure 4 Simplified single-line diagram of the industrial grid and its protection strategy under investigation

The on-site, own power production is in principle designed to meet the entire plant load demand. The intertie connection with the grid however remains intact throughout operation, to be able to cope with contingencies within the local power system and quickly restore any instantaneous power unbalance that might occur. It can be seen that the protection strategy required for such a complex and dynamic power system should take into account the overall system behaviour in order not to jeopardize the intent of the redundant power supply system. The system under investigation in this case study comprises a typical industrial distribution system, consisting of 4 local synchronous generators, connected via step-up transformers to the high-voltage double bus bar. It can be configured as a self-sustaining micro-grid, if required. The power is distributed via three step-down transformers to the local process load. A dedicated intertie transformer interconnects the

industrial grid with the external utility grid. Although the presence of the intertie transformer could provide backup power in the case of internal industrial grid power unbalance, for economic reason the rating of the intertie transformer is commonly limited to the largest identified single contingency. Suitable protection devices at both the utility end and the industrial local grid end are used to protect not only the intertie transformer but also the utility from prolonged disturbances induced by anomalies in the industrial grid. Figure 4 together with Table 1 provides the detailed protection scheme of the concerned relays.

Table 1 Detailed Relay Protection Scheme

	Relay 1	Relay 2	Relay 3	Relay 4
Type	OC	OC	RP	RP
Trip	CB-1	CB-2	CB-1	CB-2
Direction	Non	Non	→Industry	→Utility

Relay 1 and Relay 2 provide backup overcurrent (OC) protection in the case of unit protection failure. Non-directional OC relays are sufficient to disconnect the intertie transformer under severe overloading and external fault conditions. In addition to the OC protection, reverse power (RP) protection is also provided to shield the utility from prolonged abnormal power flow due to incidents originating from within the local industrial grid. Relay 3 monitors the power flow towards the industrial grid while relay 4 monitors the power flow towards the utility grid. The setting of relay 3 and relay 4 is often a reflection of the power exchange agreement between the utility and the industry. If a given power exchange violates the agreed values, this would initiate a trip command for CB-1 and CB-2, initiated by relay 3 and relay 4, respectively.

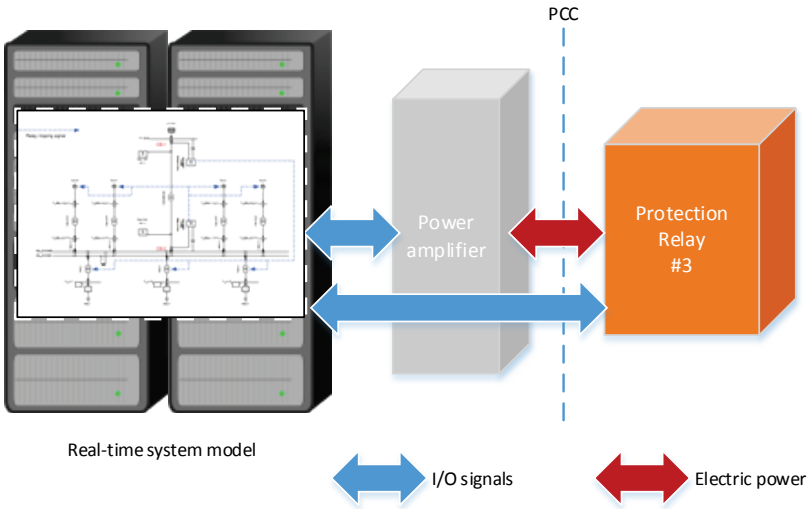

Figure 5 Schematic representation of validation approach for the protection strategy

To allow the industrial grid to fully benefit from the intertie transformer connection, a smart reverse power protection scheme is included to provide active system level load/generation shedding. Instead of disconnecting the intertie transformer, the relay 3 trip signal is controlled to shed the load in a predetermined sequence when the power *import* exceed a pre-set limit. Likewise, the relay 4 trip signal is controlled to shed the generators in a predefined sequence when the *export* exceeds a pre-set limit. The aim of this interconnected protection strategy is to help the industry preserve the intertie connection and rapidly restore operation following severe unforeseen disturbances, something that will not be possible without including the system aspects. Implementation of such a system level active load/generation shedding strategy demands a thorough understanding of industrial system dynamics and its interaction with the utility grid under various perturbations, as opposed to the setting of merely unit protection where system dynamics can be largely omitted.

The validation of such a system level active load/generation shedding strategy is focussed around relay 3. The relay itself (hardware) and its proper behaviour is therefore considered as the equipment under test (EUT) and is incorporated in a hardware in the loop test set-up as shown in Figure 5. The remainder of the industry grid, protection equipment as well as the utility grid are modelled in real-time in a real-time-simulator and interfaced with the equipment under test through suitable power amplifiers and high-bandwidth sensors, based on a secondary injection principle. The ultimate purpose of such power system oriented product testing is to confirm the validity of design assumptions, as well as the product performance. The validation itself consists of running through a large number of possible grid configurations, scenarios, contingencies and validating the correct response from the EUT at

each point. The correct handling of the load shedding profile during contingencies and loss of local generation is most illustrative. The case study results show that the relay algorithms can distinguish between the transient effects caused by load perturbations and then does not trip, and real loss of local power, on which an appropriate amount of load is disconnected according to the loss in power as well as the expected available power after the disturbance has passed. A validated strategy ensures that the impact on the production of the plant is minimized during such contingencies.

FINAL REMARKS

Implementing closed loop testing techniques to validate sophisticated equipment operation in complex power grids will become unavoidable in order to ensure stable and reliable grid operation in future power electronic dominated grids.

However, numerous challenges still need to be solved first and international procedures aligned before testing and certification - based on HIL - will become common place as type certification is today.

REFERENCES

[1] D. Liang, L. Wang, *Coordinated voltage and power flow control in distribution network*, CIRED Workshop, Stockholm, Sweden, 2013.

[2] *Integrated ICT-platform based Distributed Control in Electricity Grids*, www.integral-eu.com (EU-FP6)

[3] E.C.W. de Jong, R.A.A. de Graaff, et al. "International white book on real-time power-hardware-in-the-loop testing, DERLab e.v., Kassel, Germany, 2011

[4] E.C.W. de Jong, R.A.A. de Graaff, P.T.M. Vaessen, *Flex Power Grid Lab, an electronic equipment test laboratory for emerging MV applications, including grid inverters*, Proceedings of the 16th Kasseler Symposium, Germany

[5] E.J. Coster, 2010, *Distribution grid operation including distributed generation : impact on grid protection and the consequences of fault ride-through behavior,* PhD dissertation, Technical University of Eindhoven, NL