Mitigation of grid overloads and voltage deviations using storage

Santiago PEÑATE VERA
DNV GL – The Netherlands
santiago.penatevera@dnvgl.com

Jos VAN DER BURGT
DNV GL – The Netherlands
jos.vanderburgt@dnvgl.com

ABSTRACT

This paper addresses the mitigation of grid overloads and voltage deviations by the use of storage devices in low and medium voltage distribution grids with a high penetration of renewable sources and electric vehicle chargers or heat pumps.

INTRODUCTION

With the ongoing rise of installation of heat pumps and electric vehicle charging poles and the increase of local fluctuating generation, Distribution System Operators (DSOs) are experiencing unacceptable voltage deviations, reverse current flows, and overload of cables and transformers, forcing them to re-think the way they have been estimating how MV and LV grids develop.
The traditional solution for these issues is the cable and transformer redundancy or upgrade, which may be very difficult to perform in existing grids like city areas. However, with eventual cost reductions and technological developments, the use of smart storage elements presents itself as a complementary (and probably alternative) solution to these problems.

ADDRESSING THE PROBLEM

During the investigations of the effects of storage in electrical grids under potentially disruptive situations like massive use of electric vehicles and high availability of decentralized photovoltaic generation, a software tool (PLATOS) was developed to assess the optimum location, size and dispatch of storage devices to try to minimize the impact of the new consumer's (prosumer's) behaviours in the existing electrical infrastructure.

The problem of storage in electrical grids has three aspects: optimum location, optimum power and energy capacity sizing of the located storage, and optimum dispatch of the storage for a defined time interval where generation and demand profiles are given.

From the authors' perspective, the storage problem can be formulated in two ways; the first is to use nonlinear programming [6,7] to mathematically formulate the power flow equations, and include all possible restrictions for all the simulation steps [8]. This approach increases its complexity with the size of the grid and the number of profile intervals to simulate; as a consequence the simulation time rises, limiting the usefulness of this approach. The other approach is to mix heuristic knowledge and convex optimization: this option forces the problem formulation to be split up into the three stages mentioned earlier, in order to make feasible to reach a solution. This last option is the one we have chosen in order to study the possibilities of grid performance improvement using storage devices.

METHOD

When talking about optimization, it is very important to specify the objectives that are pursued. In this particular case the objective is to produce the lowest number of voltage problems and the lowest amount of branch elements overload. This is achieved by the injection of power in the designated locations over time with the restrictions imposed by the state of charge of the storage devices. In the following paragraphs the optimality is always with respect to the number of voltage and overload problems; the lower, the better.
As input to the simulation there is an electrical grid and generation and demand profiles that are to be evaluated using the power flow technique.
Over this base, several storage parameters are optimized to try to achieve the lowest number of grid problems. The variables to optimize are the capacity and the power dispatch for a series of storage devices, whose location is assessed by the software, based on the analysis of the results of the power flow simulations of the given profiles.

In the following paragraph the most important stages of the method are described. In the last subsection (Simulation logic) the described stages are interrelated to assemble the storage optimization method.

Initial profiles simulation and results analysis

This is the first stage of the process. The generation and load profiles are evaluated for the given electrical grid using the power flow technique. The results include the per unit node voltages and the branch element currents, that compared to the nominal values show if there has been values outside the safety operation margins. Based on this analysis of the results, the software proceeds to the optimal storage location.

Optimal storage location

For this stage of the process one might think that good approaches to the problem are dynamic programming [2,4] or genetic optimization [1,3], they are, but for the objective of eliminating the voltage and overload problems the optimal location is achieved in the presented method

through the use of heuristic knowledge. This is a very simple approach that produces good results in no time. Remember that there are no financial objectives involved in the optimization, just problem solving.

Optimal storage locations are those nodes where there are voltage problems and those nodes receiving the flow of current in case of overloads for the time series simulation.

This simple rule provides the necessary locations to solve the grid problems with power injections or subtractions.
This optimal location solution does not enter to evaluate the possible trade-offs between the possible sanctions imposed to overloads or voltage deviations against the investment cost of the storage devices or their LCOE (Lowest cost of energy: financial performance indicator of production units).

Optimal storage power and energy capacity sizing

The objective at this stage is to know which capacity and power is required by the located storage devices in order to solve the grid problems.

To know this, optimal power dispatch optimizations of the storage devices are performed for those time instants where the initial power flow series simulation results analysis revealed grid problems. The optimal power dispatch optimization series of the storage devices is done using a gradient method to obtain the amount of power that the storage devices must inject or subtract from their respective nodes in order to achieve the lowest number of voltage or loading violations. The optimal power dispatch simulations are performed with no power or energy constraint in the storage devices. Those two magnitudes are the result of this stage.

Once the power dispatch optimization process is finished, the hypothetical maximum energy stored and delivered, as well as the maximum input and output power are calculated for each device. These are the values used for the next stage of the process.

Note that the capacity obtained from this stage is nothing but a first estimate of what the capacity should be, since no storage control module has been used to calculate internal losses, or self -discharges. Also the initial state of charge, which plays a key role in the next stage, has not been used neither in the consecution of the energy and power first estimate of the storage devices.

Optimal storage dispatch

At this stage we know the location, an approximation of the energy capacity and the power needed by the storage devices to solve the grid problems in an ideal situation where the storage devices have no losses or self-discharges. Now it is required to know the power profiles of the selected storage devices and if they will act as expected to get rid of all the grid voltage and load violations.
To obtain the final storage power profiles, it is performed a simulation of the complete profiles, but this time optimizing the storage devices power dispatch in order to solve the grid problems, while keeping the storage devices charged without causing grid problems. The storage devices are modelled with a control module that calculates the storage losses and the state of charge at every step of the simulation. For the simulation of the storage charging the authors' decided to keep a real-time approach, this means that for a determined time step, the software does not look to the future, but only to the previous steps. This way the algorithm remains close to how an actual real-time implementation would act.

Simulation logic

Now the previously explained stages are combined to produce the complete optimization result.

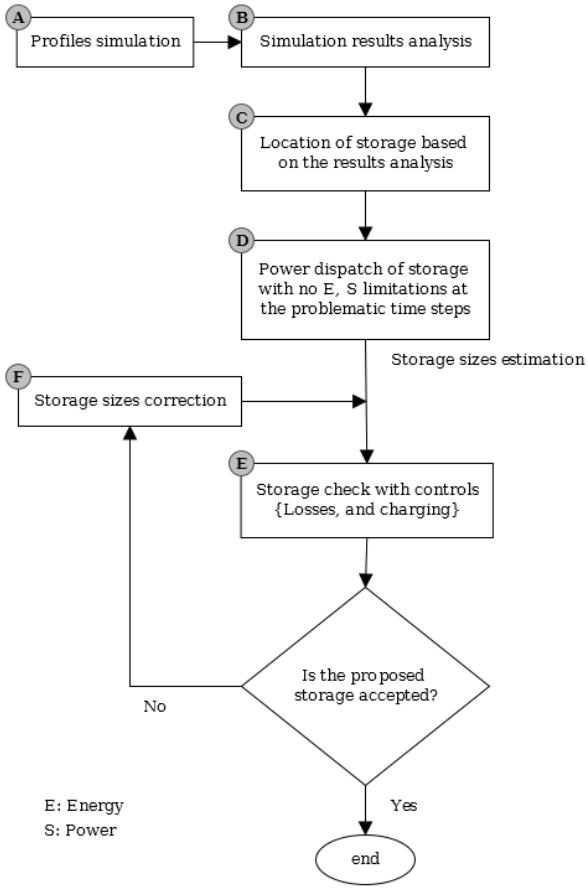

Figure 1: Simulation diagram

The complete simulation scheme follows the logic depicted in the *Figure 1*. The logic of the method is the following:

A) Given profiles of loads and generation, perform

power flow simulations for every profile time instant. The results arrays are kept for analysis.

B) Analysis of the results of the previous stage. The analysis will provide the bus bars with problematic voltage deviations and the branch elements that are overloaded (if any). The results analysis also provides the profile instants that contain problems; this is relevant for the stage D.

C) In this stage the results are analysed to obtain the group of bus bars where storage devices are relevant. Then the grid model is expanded with the storage devices for later use.

D) In this stage of the process the located storage devices are operated to provide the amount of power that solves the grid voltage and load problematic deviations. This is done using convex optimization to obtain the dispatched power of the storage devices that produces the lowest number of voltage and load problems on the grid elements. This idealized power profile is used to obtain the storage devices power and energy capacity that defines them.

E) Now this stage is analogous to the stage A, but now the storage devices are present and operated in a real-time fashion to know if the power and energy definitions obtained at the stage D are sufficient to solve the problematic situations. If not, the process continues to F.

F) The storage devices power, energy and initial state of charge are varied. Then the process continues to the stage E for the check of the new storage devices definition.

PRACTICAL APPLICATION

The software has been tested in the framework of the NEMO project, where Fraunhofer ISE (Germany), EMD (Denmark) and DNV GL (Netherlands) provide tools that together can provide solutions to MV and LV grids by load shifting, grid reinforcement and storage placement, sizing and dispatch. The grids are provided by the project stake holders, which are mainly DSOs from the three counties.

Boundaries

These are the safety boundaries chosen for the "per unit" node voltage and the branch element load in percentage. If the power flow simulation reveals that some voltage or loading value is outside the safety limits, the program saves the occurrence as an error to be corrected with storage in the posterior stages.

	Lower limit	Upper limit
Voltage (p.u.)	0.95	1.05
Load (%)	0	100

Table 1: Voltage and loading limits (Safety intervals).

Grid used

The method has been tested with several electrical grids provided by the NEMO stakeholders, but in this paper we will present the following grid:

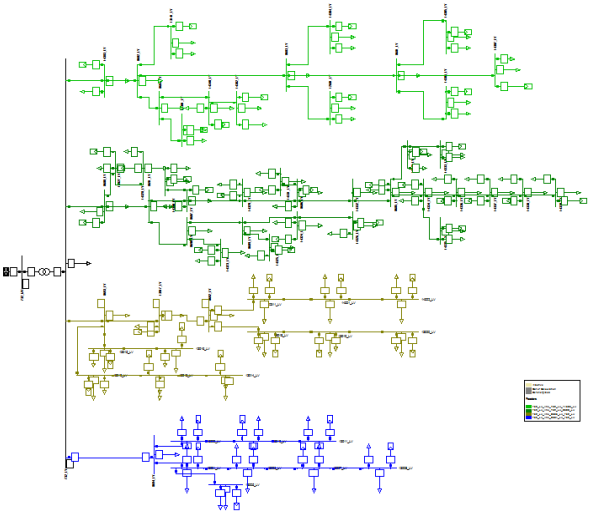

Figure 2: studied low voltage grid.

The studied grid is a residential low voltage network that includes the modelling of solar photovoltaic power production at household level and the connection of electric vehicles through residential charging poles.
The grid topology is radial with a medium voltage to low voltage transformer from which four feeders emerge. See Figure 2.

In this study case there are 141 households with an annual consumption of 444.45MWh, an annual photovoltaic generation of 213MWh with 7.8kW peak at 49 of the households. There are also five electric vehicle charging poles, where the average charge is performed at 22kW for 40 minutes. The profiles contain data for every 20 minutes for period of a year.

Results without storage

The problems detected for this case are the following:

	Transformer	Nodes
Number of voltage deviations	N/A	1221
Number of overloads	262	N/A
Average deviation	9.4 %	0.0042 p.u.
Maximum deviation	18.9 %	0.0108 p.u.

**Deviations accounted as values outside the safety interval*.

Table 2: Grid violations without storage.

The simulations of the profiles show no line overload whatsoever, so those are omitted in the results.

Storage proposed

The Table 3 shows the storage suggested by the program with the rules described in the section Optimal storage

location. The Figure 3 shows the locations in the grid schematic for clarity.

Storage location bus	Energy (kWh)	Power (kW)
732_LV	10.6	33
12681_LV	10.2	33
14384_LV	19.0	33
14385_LV	12.3	33
14386_LV	11.3	33
14387_LV	16.4	33
8681_LV	14.1	33
8683_LV	11.5	33

Table 3: Storage definition.

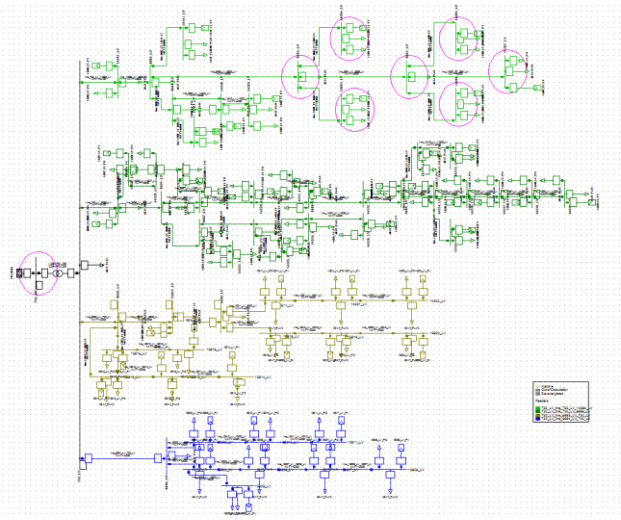

Figure 3: Storage locations.

The storage located at the high voltage bus of the transformer is to mitigate the transformer overloads. The seven other storage devices located in one of the feeders are to mitigate the voltage issues in that feeder. One might think that the seven storage devices located at the feeder might be grouped to only one at the end of the feeder. Our experience is that such approach makes the solution of the optimization problem much harder to achieve. Since the solution seeks to technically solve the problems not taking into account the financial aspects, we accept this solution, but keeping in mind that it might be very uneconomic.

Results with storage

Observe that both the voltage and loading deviations are negligible, see the Table 4. The results when the storage devices are used show no line overloads neither; so again, those are omitted in the results.

	Transformer	Nodes
Number of voltage deviations	N/A	82
Number of overloads	46	N/A
Average deviation	0.0031 %	0.0007 p.u.
Maximum deviation	0.0099 %	0.0033 p.u.

**Deviations accounted as values outside the safety interval*

Table 4: Grid violations with storage devices.

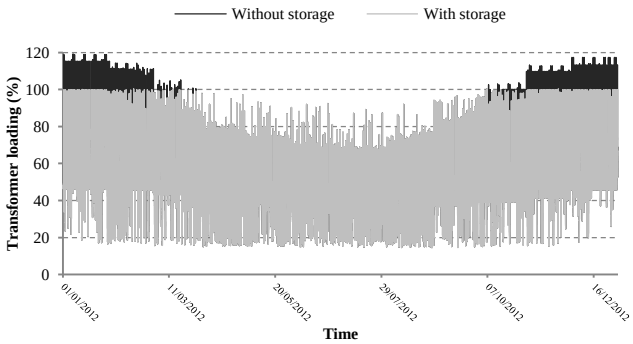

Figure 4: Transformer loading with and without storage.

The biggest effect is in the transformer, where the loading is truncated to 100% (the imposed limit, see the Table 1) by the storage devices effect.

CONCLUSIONS

Using the proposed method, storage devices can satisfactorily take care of voltage deviations and overloads if the storage devices are located properly.
The proper location is assessed using heuristic knowledge, which turns out to provide the rules to locate storage where it is most effective. Not surprisingly those locations are the locations experiencing the problems.
The number of locations is based on very strict results analysis criteria. It is necessary the development of soft criteria to produce only the most meaningful storage locations.

FUTURE WORK

To include a financial optimization that can effectively find the optimum trade-off point between allowing grid violations and minimizing the storage devices cost. This would require the accounting of financial benefits derived from the storage usage[5].

The addition of soft criteria to cope with soft violations that can perfectly be tolerated by the electrical grid, this would produce less storage locations.

REFERENCES

[1] Ghada Merei, Cornelius Berger, Dirk Uwe Sauer, 2013, “Optimization of an off-grid hybrid PV–Wind–Diesel system with different battery technologies using genetic algorithm”, Solar Energy 97, 460–473.

[2] Sioshansi, R., Madaeni, S.H., Denholm, P., 2013, “A Dynamic Programming Approach to Estimate the Capacity Value of Energy Storage”, Power Systems, IEEE Transactions on (Volume: 29, Issue: 1)

[3] J. García-González , R. M. R. d. l. Muela , L. M. Santos and A. M. González, 2008, "Stochastic joint optimization of wind generation and pumped-storage units in an electricity market", IEEE Trans. Power

Syst., vol. 23, no. 2, pp.460-468.

[4] Xiaomin Xi, Ramteen Sioshansi, Vinzenzo Marano, 2014, “A stochastic dynamic programming model for co-optimization of distributed energy storage”, Energy Systems, Springer 5:475-505.

[5] J. M. Eyer and G. Corey, 2010, “Energy storage for the electricity grid: Benefits and market potential assessment guide”, Sandia National Laboratories, Tech. Rep. SAND2010-0815.

[6] Rupanagunta, P., Baughman, M.L., Jones, J.W., 1995, “Scheduling of cool storage using non-linear programming techniques”, Power Systems, IEEE Transactions on (Volume: 10, Issue: 3).

[7] Hua Wei; Sasaki, H., Kubokawa, J., Yokoyama, R., 1998, “An interior point nonlinear programming for optimal power flow problems with a novel data structure”, Power Systems, IEEE Transactions on Volume: 13 - Issue: 3.

[8] Thomas F. Brady, Andrew L. Liu, 2010, “The analysis of electricity storage location sites in the electric transmission grid”, Proceedings of the 2010 Industrial Engineering Research Conference.