MANAGING BLACKOUT FOR A LARGE INDUSTRIAL DISTRIBUTION NETWORK

Muhammad Imran KHALIQ
Engro Fertilizers Ltd – Pakistan
mikhaliq@engro.com

Muhammad Usman FAISAL
Engro Powergen Ltd – Pakistan
usman.faisal@hotmail.com

ABSTRACT

BLACK-OUTs for Ammonia Fertilizer Plants are a major area of concern. Not only the re-start time is approximately 3-days, but the high chances of equipment damage make them a nightmare for fertilizer industry. Serious Safety repercussions may also result in addition to the financial losses. Once a blackout occurs, emergency power supplies to Safety and Process critical equipment have to be ensured before it could turn into a catastrophe. Thus designing an effective and well-coordinated Emergency Power System to manage black-outs is as important as making the bulk power available for plant operation.

Engro Fertilizers has one of the most complex power networks in fertilizers industry, owing to multiple expansions over last 45 years. Therefore an intelligent scheme of logic for blackout management has been designed, ensuring proper shutdown of the plant for safety of personnel and equipment. In addition, re-start option on both Electrical power and through steam have provided better flexibility of operation.

INTRODUCTION

Engro Fertilizers Ltd. Pakistan is world's largest single train Ammonia Complex and largest urea producing facility in Pakistan. The main source of operation is electrical power, generated in-house using four Frame-V gas turbines from GE, of different vintages with the oldest from 1964 and newest from 2009.

Plant has been expanded in multiple expansions from 300 Tons/ day to current capacity of 6800 Tons/ day. These expansions have made the power network growth in an abnormal way, making it few of the weakest generation and most complex distribution networks in the industry. Equipment of various vintages, sizes, ratings, design technology and vendors are the main cause of this complexity. Over and above, the expansion of network caused its short circuit to breach the maximum 50kA rating of commercially available switchgear. Therefore, in order to limit the short circuit levels to 40 and 50kA for Old and New Plants, introduction of current limiting reactors and ABB's Is-Limiter have made the designs of Load Management, Steady State Operation, Isolations and Blackout Management a tedious task.

Total power generation capacity of the site is 60 MW whereas the average load throughout the year is 50 MW. The power Network is divided into two parts mainly, with GT-601, GT-602 and GT-603 and 40kA, 6600V Switchgear of EE-620X, EE-620S and EE-620N as Base Plant, and GT-604 and 50kA, 6600V switchgear EE-623.

As can be seen from the Figure 1, the three medium voltage buses are interconnected through two current limiting reactors of 800A and two networks are

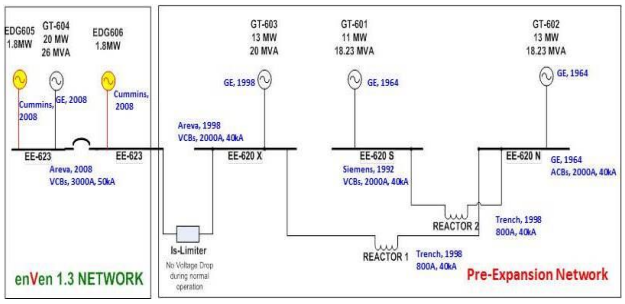

Figure 1 Engro's Power Generation Network

connected through a 2000A Is Limiter device.

The base network has 07 each Emergency Diesel Generators, rated 500kVA, 440V and connected to individual dedicated emergency power buses, having only the emergency loads. For Enven, two 6600V, 1.8MW each Emergency Diesel Generators are connected directly to EE-623, the main bus, hence feeding practically to each and every node of the power network. Each and every bus therefore can be treated as emergency bus and loads can be segregated accordingly. However, proper coordination in tripping and then restart is mandatory to make sure the correct application of entire logic.

BLACKOUT MANAGEMENT SYSTEM

Engro's blackout management philosophy has been defined based on the fact that all Ammonia complexes are very hazardous and any abnormal tripping can result in equipment damage which in turn can cause the loss of containment, resulting in something similar to Bhopal incident and has the potential of killing thousands of people. There are two systems that are part of Blackout Management

- Load Shedding Scheme
- Auto Restart & Reclose Scheme

LOAD SHEDDING SCHEME

Generally two types of load shedding schemes are prevalent in industry, having their pros & cons and particular areas of application

- Event Based Reactive Shedding Scheme
- Frequency Based Predictive Shedding Scheme

For Engro's Weak Generation and Complex Distribution system, a unique load management system has been devised, combining both event and frequency based schemes, utilizing IEC-61850, MODBUS as well as hard-wired signals. Predictive shedding is implemented through SCADA Priority tables.

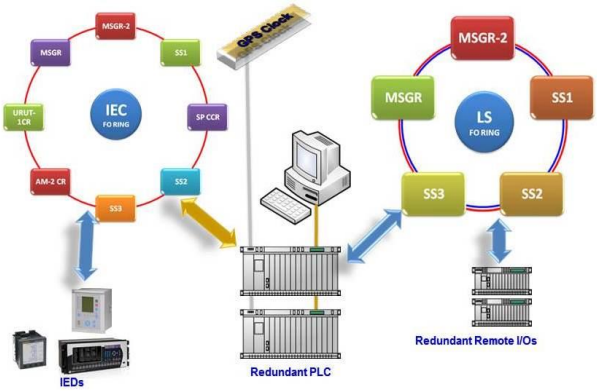

Figure 2 Block Diagram of Load Shedding Scheme

Basic details of working are

- Gas Turbine's Power Generation Capacity calculations are performed through Pre-fed Algorithm based on ambient temperatures
- Bus Load calculation are done through Power Transducers installed on each GT and each Power Links
- Enven Plant Individual Loads sensing is done through IEC-61850 compliant ABB IED's RED-670, REM-540 and REF-540 and Alstom IEDs Micom P141 & Micom P241
- Base Plant Individual Loads sensing is done through MODBUS compliant GE's G-30 & G-60 , Areva, Schneider & Siemens IEDs
- System frequency sensing is done through specialized Relays Micom P-923's installed on each MV bus
- Media & Data Conversions between IEC-61850 to RS-232 for SCADA and PLCs through GWs/MCs
- Tripping and Status signals to Schneider Quantum-PLCs over redundant Self-healing Fibre-Optic rings in 5 remote stations
- Remote stations control and communication through SCADA servers over Self-healing Fibre-Optic rings in 7 remote stations

System maintains a Ready-to-trip Loads list for various tripping scenarios. As an event occurs (GT/ Link Tripping), Controllers would send hardwired trip commands to feeders based on capacity shortfall. The entire process from event occurrence to load shedding completes in 150msec for 60's-vintage ACBs while in 110msec for VCBs. Entire program scan time is <35msec only.

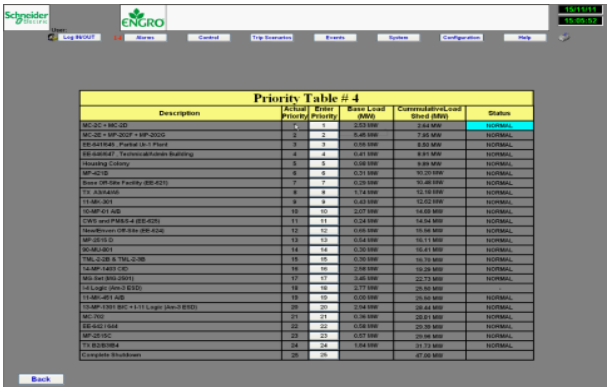

Figure 3 Tripping Priority Table

This intelligent design has enabled a precise and fast load shedding, reducing the number of blackouts in the first place. Unnecessary shedding has been avoided through fast response of the system.

AUTO RESTART AND RECLOSE SCHEME

Two different schemes exist for restart and reclose systems for Enven and Base Plants

Blackout at Enven Plant

Auto-start sequence of EDGs and separation of Enven & Base networks

In case of Enven site blackout, both Medium Voltage EDG at Enven will be started automatically and feed the entire site. These EDGs are rated at 6600 Volts and connected to the normal supply network

Following are two cases that can cause blackout at Enven site:

- Tripping of all 4-gas turbines i.e. Blackout at entire site (Enven as well as Base)
- Tripping of Is-Limiter, while GT-604 is already tripped or vice versa

In this event, first step will be to isolate the Base Network from Enven Network, by means of tripping the Is Limiter, and then both EDGs will start automatically and will come on line as per set timing sequence. The Isolation of Enven & base networks is necessary because:

- No under voltage protection function is available in base protection relays. All outgoing feeder breakers remain ON in case of a Blackout, which will result in EDGs overloading and their subsequent tripping.
- Base has its own LV emergency network, which takes over only in case there is no voltage on emergency buses.

Auto start of two EDGs & Isolation of Enven and base networks will be done using Dead Line Dead Bus (DLDB) monitoring feature (programmed on three

contacts) of synchronizing check relay, KVAS100, installed at Enven Main Bus Tie Panel. The contact of same relay re used to trip Is-Limiter series breaker

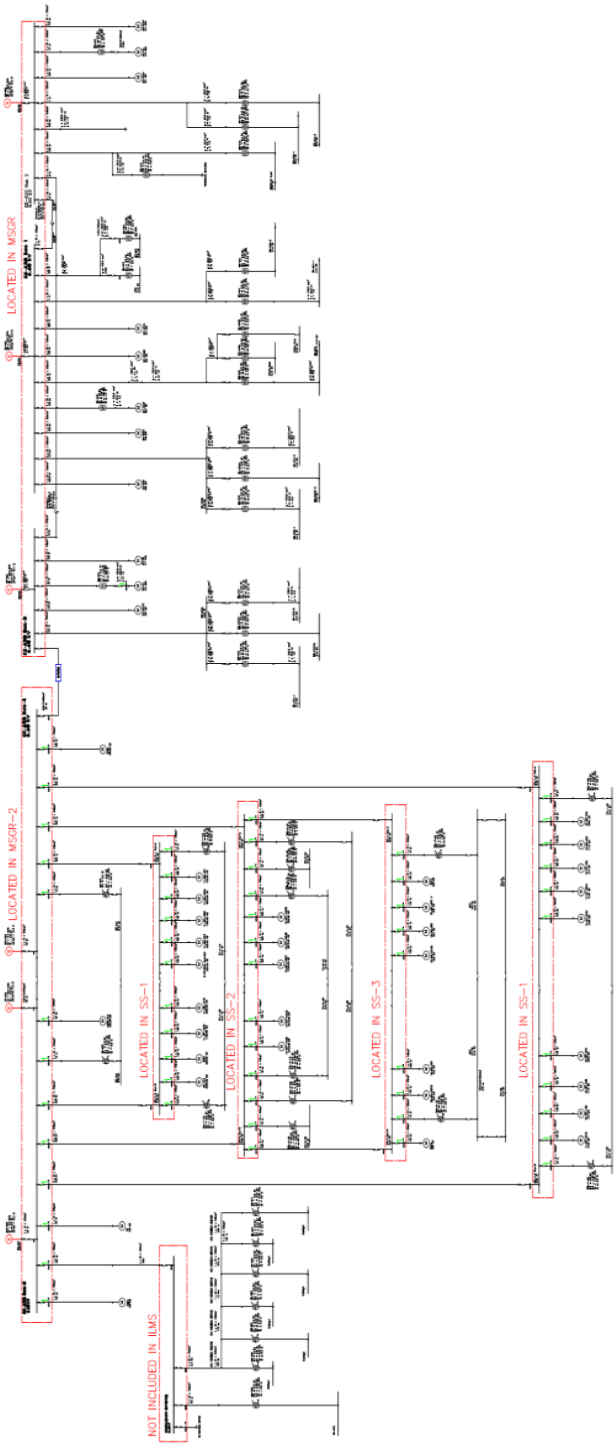

Figure 4 Single Line Diagram for Power Network

Enven Site under Voltage Trip Criteria

As, soon as the black-out occurs at Enven site, all the MV feeders will trip on Under Voltage protection available in all feeders & motors management relays at Enven. Since, the only purpose of this under-voltage protection is to isolate the feeders in case of black-out to avoid overloading of EDGs, the protection setting is kept very low i.e. definite time protection pick-up at 50% of nominal voltage with a time delay as specified in following table.

Table 1 Tripp Sequence & Time Delay

Group	Load to be tripped	Trip Delay
0	Is Limiter Series Breaker	0 sec
1	MS-1-1A, MS-2A, EE-623 Bus-4	1 sec
2	MS-1-1B, MS-2B, EE-623 Bus-5	2 sec
3	MS-1-2A and MS-3-1A	3 sec
4	MS-1-2B and MS-3-1B	4 sec

The purpose, to divide feeders into four groups on the basis of timing, is to avoid sudden in-rush loading of DC systems.

The under-voltage trip function is assigned to actuate Lock out relay for all MV Motor feeders, so that they cannot be restarted inadvertently. Whereas, in case of transformer feeders, only the breaker will trip, but not the lock-out relay, because of auto-reclosing requirements on these feeders.

The purpose of time discrimination is to avoid simultaneous switching-on of more than one transformer, at one point in time to avoid EDG tripping.

Auto Re-close Logic for Transformers

All MV transformers at Enven site will be re-closed automatically, by implementing logic through their respective protection relays.

There are fourteen MV Transformers at Enven Plant. Micom P-141 is installed on four MV Feeders of these transformers, while the remaining transformers have ABB REF-541. Auto re-closing logic will be implemented through PSL (Programmable Sequential Logic) of these relays. For this, a key selector switch, for

selection of auto re-closure between any of the two transformers will be installed on EE-661 and TML-3-1B.

Upon under voltage, transformer will be tripped, however, as soon as the supply will be restored, logic will re-close the breaker if conditions are satisfied.

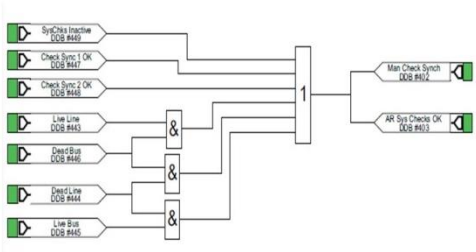

Figure 5 Typical Auto Reclose PSL

In order to distinguish between the normal maintenance and blackout, a timer of 5 seconds is provided in the logic. If the supply is restored within that time period, the relay will re-close the transformer automatically. If the supply is not restored within that time, transformer will have to be closed manually.

Closing command is also wired to LV switchgear's respective incomer breaker and bus tie breaker to make sure that LV is also re-closed. LV incomer breakers trip in case their MV breaker at transformer upstream is tripped. The hardwire control scheme blocks the reclosing in case of any fault downstream of relay.

Re-acceleration and Restart of Emergency Loads

In LV feeders requiring auto-restart, the re-acceleration relays (79) have been installed to permit auto-restarting with adjustable time delay, following a black-out.

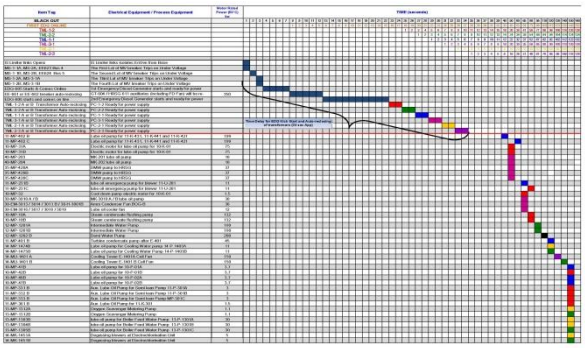

Figure 6 Timing Diagram for Auto-restart Loads

Blackout at Base Plant

Auto-start sequence of EDGs and separation of MV & LV networks

In order to create blackout at Base plant, following needs to happen

- Tripping of all 4-gas turbines i.e. Blackout at entire site (Base as well as Enven)
- Tripping of Is-Limiter, while only GT-604 is connected to network

In both the events, first step will be to isolate the Base Network from Enven Network, by means of tripping the Is Limiter. The Isolation of Enven & base networks

- Base MV switchgear has no under voltage protection and will not trip
- However, upon detection of under voltage, main incomers of low voltage switchgear will be tripped
- Tripping signal is wired to emergency switchgear and EDGs
- All seven EDGs come on line in 30 second
- After 30 seconds are lapsed, load on emergency bus are power on one by one

Restart of Emergency Loads

LV feeders requiring auto-restart, the control logic is implemented in such a way that it permits the restart with adjustable time delay, following a black-out. The purpose of time delay is to avoid simultaneous restart of all loads

CONCLUSION

With the design of this intelligent system augmented by a load shedding system, blackout management has been much effective, ensuring proper shutdown of plant for safety of equipment and personnel. In addition to it, restart of plant has become much easier considering the availability of power on different buses throughout the site