FEEDBACK ON INSTALLED EXPERIENCE WITH FULLY-DIGITAL SUBSTATIONS

Simon RICHARDS
Alstom Grid - UK
simon.richards@alstom.com

Abraham VARGHESE
Alstom Grid - UK
abraham.varghese@alstom.com

Andreas PROCOPIOU
Alstom Grid - France
andreas.procopiou@alstom.com

ABSTRACT

Digital technology has penetrated further into the substation environment over the past two decades. Firstly, vendor-specific implementations in the SCADA domain were followed by eventual standardization on IEC 61850 [1] for station-bus based digital control systems (DCS). Process bus deployments replace the traditional hardwiring to primary equipment with an Ethernet link, and also convert the primary current and voltage measurement channels into protection relays and other IEDs (intelligent electronic devices) to fibre-optic too. Achieving a full station and process bus digital implementation helps to reduce the substation physical size, move as much configuration and testing to the FAT stage (factory acceptance testing), and also decouples the dissimilar renewal cycles of the primary and secondary equipment.

The paper builds on the in-service advantages realized using IEC 61850-8-1 for the DCS, including the full protection and control scheme, extending the implementation to include the process bus too. Correct application of the standards has allowed a lot more of the substation engineering and construction activity to be undertook in the controlled environment of the factory, rather than on the substation site – where outage times and site labour are at a premium. Retrofit/refurbishment cases are also considered, considering the fact that technology progress within the secondary equipment world (protection and control) often drives a renewal much sooner than the primary plant, including the current and voltage transformers (CTs and VTs). The secondary equipment can often be renewed twice or more frequently than the primary equipment.

INTRODUCTION

In general terms, a digital substation is one in which as much as possible of the data related to the primary process is digitised immediately, at the point where it is measured. Thereafter, the exchange of that measured data between devices which may need to subscribe to it is via Ethernet, as opposed to the many kilometres of copper hardwiring which may exist in a conventional substation.

Digital substations imply a solution and architecture in which the substation's functionality is predominantly now achieved in the software, with lesser reliance on hardware implementations such as hardwiring.

DRIVERS TOWARDS DIGITAL SUBSATIONS

Increased reliability and availability

The extensive self-diagnosis capability of digital devices ensures maximised up-time of the substation. Any degradation in the performance of an asset is pinpointed in real-time. Inherent redundancy in the system may be employed to self-heal the operation, which permits troubleshooting without the need for any primary system outage.

Optimised operation of assets

The intelligence within digital substation schemes allows close monitoring of the loadflow capacity of plant equipment, compared to its design ratings.

Improved safety

The removal of wired cross-site current transformer circuits reduces the risk of lethal injury due to inadvertent opening of the circuit by personnel. The avoidance of oil in instrument transformers reduces explosion risks too.

Reduced maintenance costs

The digital substation closely monitors all substation assets. Intelligent systems analyse the data and provide recommendations on maintenance and repair actions to conduct. This allows a shift to predictive or reliability-centred maintenance, avoiding unplanned outages and emergency repair costs. It is in this regard that ongoing operational cost savings may be made, such that the lifetime total cost of ownership of the substation will be reduced.

Easier renovation and extension of existing substations

Interoperable solutions and the use of fibre optics instead of copper wires reduce the duration and cost of on-site work for the refurbishment of secondary equipment. Prudent design of the substation plans ahead for the mid-life refurbishment of secondary schemes, when often the primary equipment is left as-is, given that decades of years of serviceable life may still remain. This permits the refurbishment activity to take place with the absolute minimum of primary system outage.

Improved communications capabilities

Data exchange between intelligent devices, intra and inter-substation, is optimised through Ethernet communications.

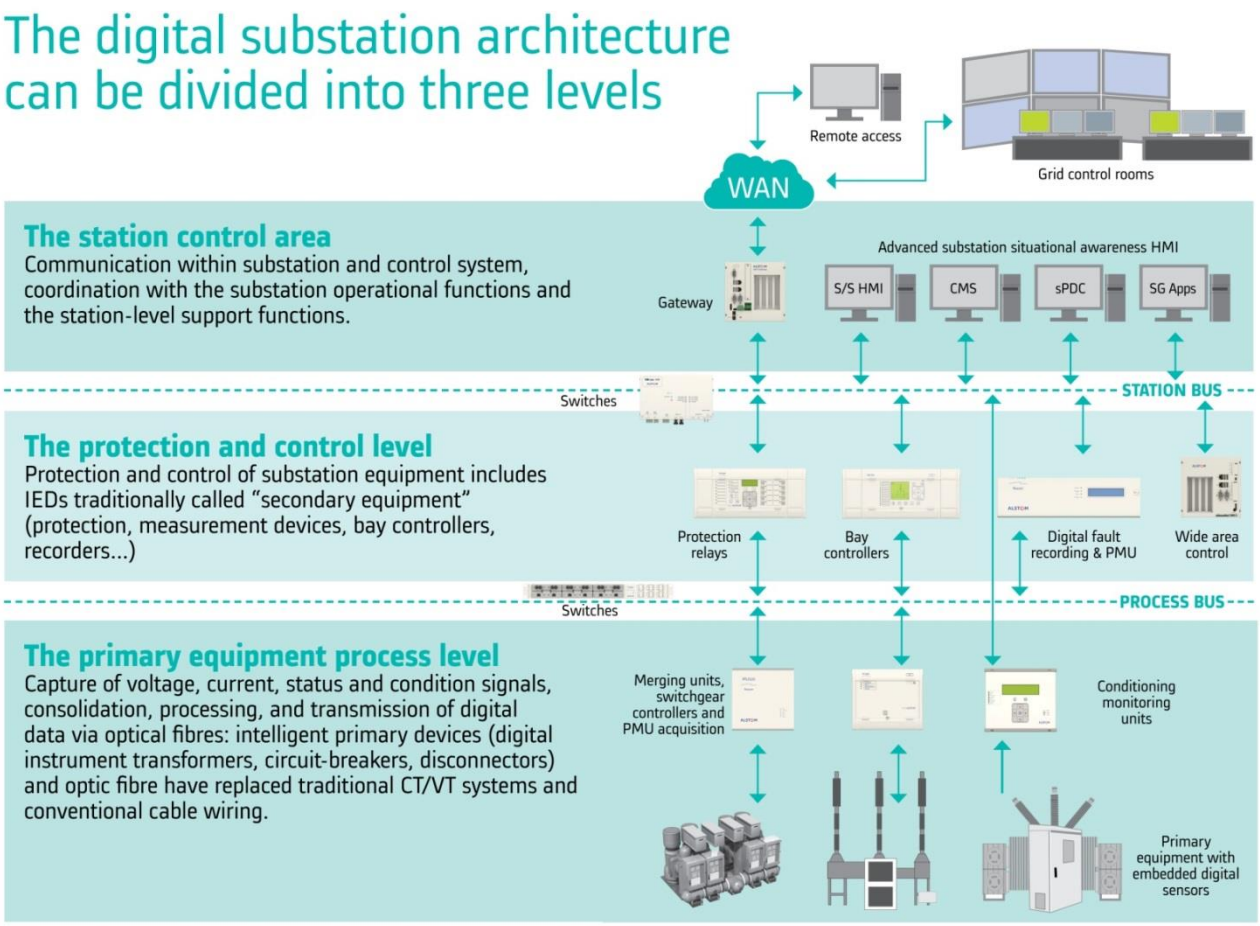

Figure 1 Generic overview of a digital substation

TYPICAL ARCHITECTURE OF DIGITAL SUBSTATIONS

The process level

A digital substation is based on a communicating architecture, whereby real-time operational measurements are polled from the primary system. This data is obtained using sensors, embedded within the primary system, which is termed as the electrical process. It is communicated to devices which must act on those measurements by means of a "process bus". The process bus is also the link by which the primary equipment information from out in the yard travels back to the substation control house – it links the field back to the substation. In a fully digital architecture, control commands (switchgear operator commands, protection trips) also are routed to the primary devices via the process bus, in the opposite direction.

The protection and control level

Between the process bus and the station bus are devices historically identified as the "secondary equipment". In the digital substation, these devices are IEDs (intelligent electronic devices), interacting with the field via the process bus, and with other peer devices in the bay, to other bays, and the digital control system via the station bus.

The station control area

The digital substation station bus is much more than a traditional SCADA bus, as it permits multiple clients to exchange data, supports peer-to-peer device communication, and links to gateways for inter-substation wide-area communication. GOOSE is more often than not used as high-speed exchange of binary status information/commands.

In addition to the need for distributed intelligence between IEDs at the station level, there is the need to distribute the information to local or remotely-stationed control operators to visualise the operational status of the substation.

DIGITAL INSTRUMENT TRANSFORMERS

The root of many of the limitations of conventional instrument transformers is the reliance upon an iron core. Instead of an iron core, the translation from primary to secondary measurement may use optical, Rogowski or capacitive technology. Some examples of the principles are (considering just the CT function here for brevity):

• Optical sensors (AIS) use the Faraday effect, whereby a fibre optic loop sensor carrying a polarised light beam encircles the power conductor. This light will experience an angular deflection due to the magnetic field, generated by the primary current flow.
• Rogowski sensors (GIS) dispense with the conventional CT core and instead implement windings as tracks on a multi-layer printed circuit board. Four quadrants of the board are clamped together to form a toroid around the primary conductor. The sensor output becomes a low-level voltage measurement, which can be accurately correlated to the primary current.

Fig. 2 - Example optical CT showing freedom to mount in different orientations, such as horizontally

ANALOGUE SIGNAL CONVERSION, MERGING AND SWITCHGEAR CONTROL

Merging units perform all the data processing necessary to produce a precise output data stream of sampled values according to the IEC 61850-9-2 standard [2]. Most protection, control and measurement schemes use three phase groups of currents and voltages, often with neutral measurements too, thus the typical light edition (LE) deployment of the standard packages the messages in this way.

For retrofitting, or where the client has a preference to retain traditional instrument transformers, analogue merging units are available, digitising the CT and VT outputs at any convenient kiosk out in the yard.

Digital controllers (SCU - switch control units) are the fast, real-time interface to switchgear, mounted close to the plant which they command. They replace hardwiring of inputs/outputs by an Ethernet interface to the yard.

Fig. 3 - Example integrated merging unit (analogue CT/VT plus switchgear control) for yard usage

NUMERICAL PROTECTION RELAYS

In a fully-digital architecture, protection relays receive currents and voltages as IEC 61850-9-2 sampled values, and issue trip or alarm signals using IEC 61850-8-1 GOOSE. The best relays extend their supervision facilities to include comprehensive addressing and plausibility checking of the incoming sampled values from the process bus. This addresses the fact that the traditional task of current and voltage sampling is now external to the device, and is connected via Ethernet. This ensures maximum security, dependability and speed of the protection scheme.

Fig. 4 - Example process bus protection relay with compact 40TE (8” width) footprint

DIGITAL CONTROL SYSTEM (DCS)

The DCS is the intelligence which binds together the digital substation. It is central to the flow, management and presentation of all components in the digital substation. Specific focus can be paid to the way that operational and plant condition monitoring data is networked. This avoids the need to overlay multiple Ethernet networks. In addition, attention has been paid to how data can be presented as simple “situational awareness” dashboards, such that operational staff can clearly see what is happening on the network, easing subsequent decision-making on actions to take.

All digital substation architectures can be set up as an IEC 62439 [2] standards-compliant self-healing ring (HSR protocol) or dual-homing star (PRP protocol); both of which are "bumpless" redundant. This means that data is exchanged between devices via two diverse paths, and should one of these paths fail, data is instantly available hot from the other, with zero delay. Fibre optic networks link all the system's components, together and with the operator interface (HMI), through a full range of Ethernet switches.

Ambient weather condition inputs such as wind speed and direction can be inputted, to integrate dynamic line rating and improve circuit ampacities [3]. Wide area control units (WACU) offer the possibility to exchange IEC 61850 GOOSE data between voltage levels within a substation and also between neighbouring substations.

Fig. 5 - Digital Control System – view depicting integrated weather monitoring.

EXAMPLE COMMERCIAL PROJECTS

Energinet, Denmark – Digital Current Measurement and Protection

In this project, the protected circuits are hybrid lines, consisting of 400kV lines, and cabled portions laid sub-sea and underground where required. There are paralleled pairs of cables each 5km length, and the operational demands are such that auto reclosing is required for faults on the overhead lines, but not for faults within the underground cable sections. The differential protection is thus used for fast and precise detection of faults within the cables. The cables are a part of the two main 400kV connections running from the south to the northern part of Denmark.

The equipment supplied includes 72 optical CT units, 24 merging units and 24 line differential relays which subscribe to the sampled values in a process bus protection scheme. A lightweight dry type insulator and window head design allow mounting of the Optical CT (COSI) and CVT on a single pedestal saving valuable yard space. For Energinet, Denmark, a single structure and foundation per phase carries the larger mass of the cable, plus the optical CT support on a cantilever frame extending to 2 metres horizontal distance. The reduced size and weight are attractive benefits over conventional combined units, allowing placement in compact substations where space may be limited.

Philippines, 115kV GIS Substation – Conventional Analogue Instrument Transformers Interfacing to Full Digital Protection and Control

In the Philippines, there was a desire to reinforce the core distribution network, whilst delivering a full IEC 61850-compliant installation within 8 months execution time. This was achieved by delivery of a turnkey protection and control system for 15 x 115 kV bays.

The Ethernet architecture of a process and station bus solution resulted in reduced cabling and installation time, and also is expected to deliver a reduction in maintenance costs of the order of 70%, as conventional time periodicity-based maintenance shifts to reliability-centred maintenance (akin to the way that a car would traditionally require a service every 1 year or 20000km, but now an on-board computer provides the recommendation based on any detected failure, or an adverse trend of condition monitoring).

Figure 6 shows an illustrative portion of the 115 kV substation consisting of three feeder bays, a bus coupler bay and three transformer bays in a single-bus arrangement. There are three main bay level devices (IEDs) – a bay control unit (BCU) and two protection relays (PR1, PR2). The protection relays – feeder differential, distance, transformer differential and backup protection – all interface with primary plant on the IEC 61850 process bus. Currents and voltages are converted to IEC 61850-9-2LE sampled values (SMV) at 4kHz by Merging Units (MU1, MU2…) located close to the instrument transformers; there is a dedicated MU per protection IED as shown in the architecture extract. This aligns with the philosophy of two fully independent main protections for each bay; the current and voltage SMVs are generated in separate MUs and have independent communication paths to the respective relays. The binary inputs and outputs necessary to engineer the protection and control schemes are exchanged between IEDs as IEC 61850-8-1 GOOSE messages. The Switchgear Control Unit (SCU) acts as the interface for GOOSE messages with the substation switchgear; the SCU, co-located with the switchgear, has binary inputs for capturing status and other binary information from the switchgear, and output contacts to issue commands in line with control or trip signals received from the bay IEDs. In short, all data in the substation is digitised and carried on optic fibre; copper cabling is avoided, enhancing operational safety in the substation environment. By digitising the signals and transmitting them on fibre, the potential for EMC issues affecting any of the signals is also suppressed.

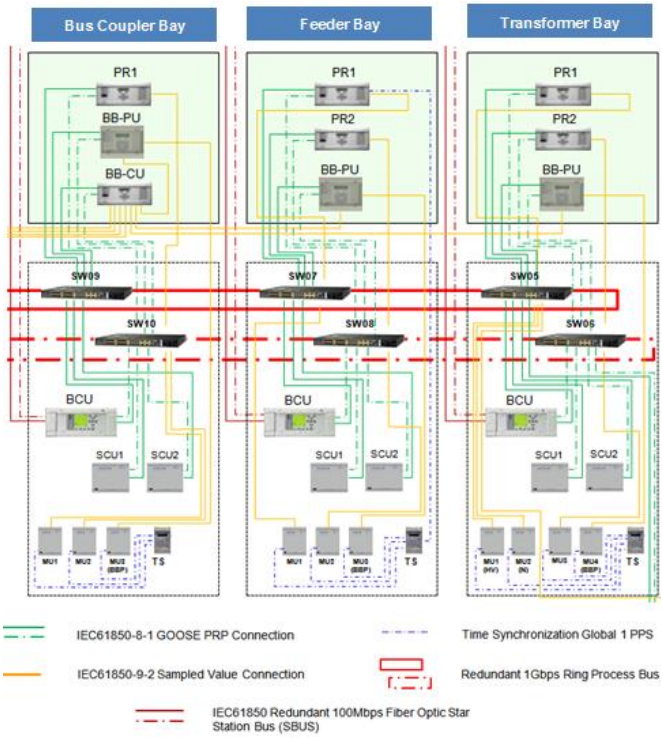

Fig 6 Digital substation process and bay level architecture

The GOOSE traffic is carried on a redundant LAN, working on the IEC 62439-3 Parallel Redundancy Protocol (PRP) providing bumpless redundancy. The communication redundancy is supplemented by duplicated SCUs in each bay; this aligns with the established philosophy of having two trip relays in each bay. Protection for the 115 kV busbar is also process bus based.

Venezuela, 138/24kV Substation – Security of Supply for Onshore Petrochemical Fields

After several successful decades of implementation of the IEC 61850 station bus in the transmission substations of the petroleum sector in Venezuela, the implementation of a new substation managed by a completely IEC 61850-compliant digital control and protection system has been delivered. The substation is a part of the ring transmission of power at 138 kV which the petroleum industry builds, operates and supports for supplying the region of the western coast of Lake Maracaibo. This substation serves the new oilfield to the south of Maracaibo, Venezuela's second city.

The complete solution of digital control, protection, meters, GPS clocks and Ethernet switches, is in a similar topology to that described previously for the Philippines. Of note for this project is the range of ambient temperatures and high humidity. Outdoors, adjacent to the LCC, process-bus merging units are housed in dedicated kiosks, as depicted in Figure 7. Given the environmental conditions, the kiosks needed a special construction, for thermal isolation and high reflection of the solar radiation, plus IP protection to prevent ingress of moisture or particulates.

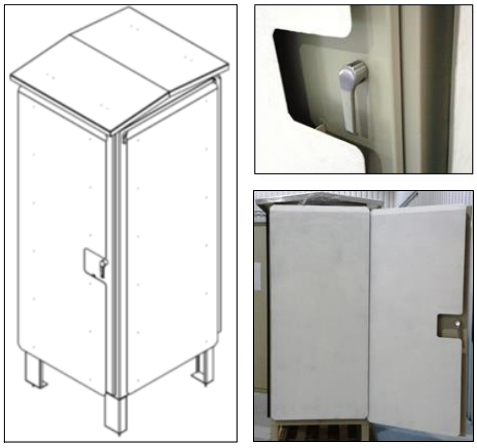

Fig 7 Construction details of outdoor kiosks for analogue merging units and switchgear control units

CONCLUSIONS

Digital substation implementation allows the lifetime total cost of ownership of the substation to be reduced. The reduced size and weight of digital instrument transformers, and the protection and control panels provide attractive benefits, allowing placement in compact substations where space may be limited. The case-study projects show the increasing confidence in the application of digital substations worldwide. This is essential for utility grids, where cost savings and health and safety are of paramount importance. As such, these projects are a valuable return on experience for other utilities to follow in the same manner for both new and refurbishment projects.

REFERENCES

[1] TC57, *IEC 61850 Communication Networks and Systems for Power Utility Autommation - Parts 1 to 10*, Geneva, Switzerland: International Electrotechnical Comission (IEC), 2003 to 2010.

[2] TC65C, *IEC 62439-3:2012 Industrial communication networks - High availability automation networks - Part 3: Parallel Redundancy Protocol (PRP) and High-availability Seamless Redundancy (HSR)*, Geneva: International Electrotechnical Comission, 2012.

[3] G. Lloyd, "Real Time Thermal Rating and Active Control for Improved Distribution Network Utilisation," in GridTech 2013, New Delhi, April 2013.