GRID CODE COMPATIBLE PROTECTION SCHEME FOR SMART GRIDS

Hannu LAAKSONEN
ABB Oy – Finland
hannu.laaksonen@fi.abb.com

ABSTRACT

Medium-voltage (MV) network short-circuit protection operation time delays have traditionally been dependent on fault-current magnitude or measured impedance with fixed time delays or inverse time curves. However, MV feeder protection selectivity issues with low-voltage-ride-through (LVRT) curves of distributed generation (DG) units and the possibility of intended island operation will be increasingly important in the future and must be taken into consideration as a part of the protection scheme. Therefore, this paper presents a grid code compatible, future-proof, directional short-circuit protection scheme for Smart Grids. The proposed scheme enables the definition of protection operation time delays during normal, grid connected operation for IEDs in MV distribution network having multiple protection zones without the need for high-speed communication between IEDs.

INTRODUCTION

New network codes (interconnection requirements) require fault-ride-through (FRT) / LVRT capability and utility grid supporting functionalities from DG units and can also allow intentional island operation. In addition, in the future active network management may simultaneously affect protection settings if, for instance, the network topology is changed. Therefore, protection adaptation as well as protection principles and settings compatibility with the new grid code requirements will be increasingly needed in the future distribution networks. To improve supply reliability, MV networks will be increasingly divided into multiple protection zones in the future. Therefore, short-circuit protection operation times may become too long if high-speed communication based interlocking/blocking schemes are not utilized between the IEDs. However, communication may fail or is not available everywhere. [1]–[4]

In Fig. 1, an example case is used to present the protection needs (functions, time selectivity) when protection coordination with DG unit LVRT curve and successful transition to island operation is considered. After islanding detection, the protection scheme should adapt to the changed topology as described for example in [2]–[4]. In addition to transfer trip-based islanding detection schemes, also different new passive islanding detection algorithms and schemes have been recently proposed and compared in [5].

In Fig. 1, the possible operation principles of directional short-circuit protection in forward direction can be 1) directional overcurrent protection with fixed time delay (and high-stage / low-stage settings) or 2) distance protection with fixed time delay (in forward direction).

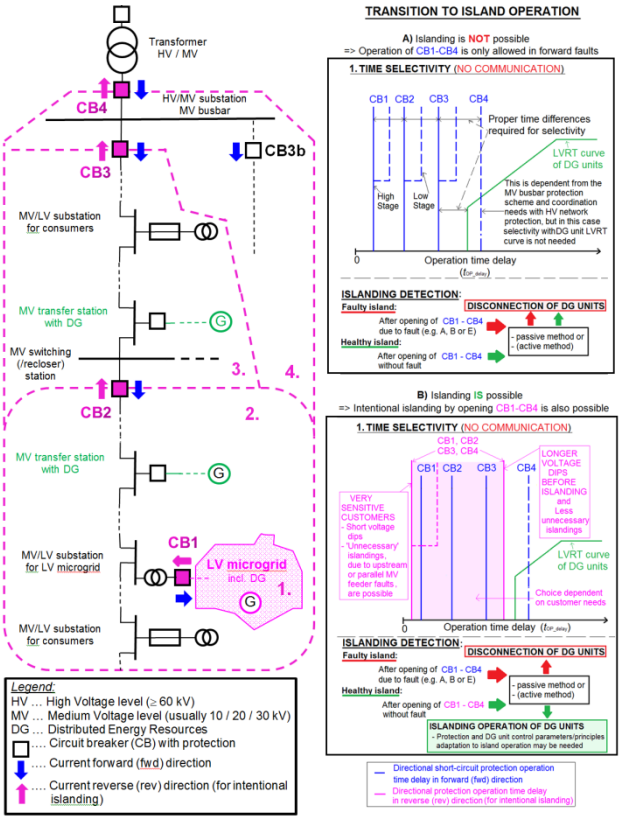

Figure 1. Possible intended islands 1.-4. and protection time selectivity issues, setting principles without utilization of high-speed communication when a) islanding is not allowed and b) islanding is possible. [6]

Also (Fig. 1) the possible operation principles of directional protection in reverse direction (for intentional islanding) can be I) undervoltage with fixed time delay (and high-stage/low-stage settings) and current direction detection in reverse direction, where function pick-up/start is based only on undervoltage (i.e. not on overcurrent, because fault current levels of inverter-based DG units can be fairly low) or II) distance protection with fixed time delay (in reverse direction).

As can be seen in Fig. 1, selectivity problems can be possible if communication based interlockings/blockings are not used, because coordination between LVRT curve of DG units (defined by grid codes) and required time differences between CB2 and CB3 in forward direction may be hard to achieve. This naturally depends on the number of consecutive protection zones and the allowed time difference between operation time delays of CB2 and CB3.

Transition to intentional island operation is possible (Fig. 1) only if active and reactive power unbalance (P_{unb} and Q_{unb}) at CB1, CB2, CB3 or CB4 is small enough (or there are enough rapidly controllable active and reactive power

units in the possible island) before protection start/operation of CB1-CB4 in reverse direction. If this is not the case, transition to island operation should be not allowed. The new grid codes like [7], could enable/support transition to intentional island operation because of *P*/*f*-droop control requirements of DG units during over-frequency situations (under-frequency based load shedding schemes could have similar kind of effect) and possibly also due to voltage control (*Q*/*U* -control) requirements. Some of these new grid code requirements have been briefly summarized in [8].

This paper proposes a new LVRT curve compatible, future-proof, directional short-circuit protection scheme for Smart Grids. The proposed grid code compatible scheme enables the definition of protection operation time delays during normal, grid connected operation for intelligent electronic devices (IEDs) in MV distribution network having multiple protection zones without the need for high-speed communication.

The operation time delay of the proposed scheme is not dependent on fault-current magnitude or measured impedance. Instead, it is based on measured voltages at that point of network taking also into account current direction. This way it is easier to obtain and maintain selectivity with DG unit LVRT requirements especially when MV feeder is divided in multiple protection zones and high-speed communication is not available. On the other hand, this proposed protection scheme could be used also as a reliable back-up protection scheme for high-speed communication based schemes.

The proposed scheme is applicable to MV networks with different topologies (radial or ring). This scheme also takes into account the possibility of transition to intended island operation. The forward and reverse settings of the directional protection are dependent on the active and reactive power unbalance (P_{unb} and Q_{unb}) at connection point of the potential intended island and also on the capacity of rapidly controllable active and reactive power inside the intended island.

The proposed scheme is generally applicable to different LVRT curves defined in various grid codes. The forthcoming European ENTSO-E NC RfG [7] is used as an example. This scheme is also applicable to distribution networks without DG units. It means that no adaptation of the short-circuit protection pick-up/start value or voltage dependent operation time delays is required due to DG unit connection or disconnection. When both inverter-based and synchronous generator based DG can be simultaneously connected to the same MV feeder, operation time delay curve of the proposed protection scheme must be based on the most stringent DG unit LVRT curve.

In following sections, first the proposed grid code compatible protection scheme is presented. After that example simulation results are presented followed by conclusions.

GRID CODE COMPATIBLE PROTECTION SCHEME

The previous section (Fig. 1) presented how time selectivity with DG unit LVRT curves may be challenging to achieve, if fixed time delays are used, MV feeder consists of many consecutive protection zones and high-speed communication utilization is not possible.

In the previous section, some of the main features of the new grid code compatible protection scheme were briefly mentioned. Fig. 2 and the following text will give a more detailed description of the proposed scheme.

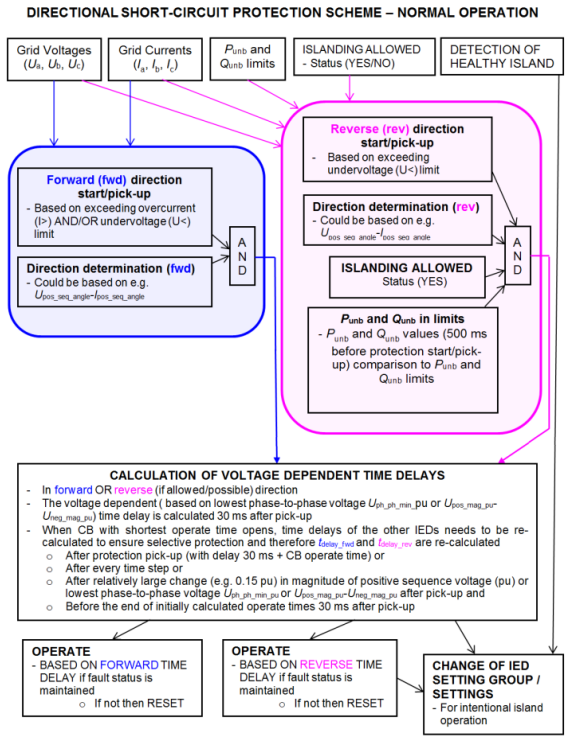

Figure 2. Proposed directional short-circuit protection scheme during normal, grid-connected, radial operation of MV network.

Directional Protection Start and Direction Determination

Forward Direction

With short-circuit protection in distribution networks having inverter- or synchronous generator-based DG units, the detection of fault i.e. pick-up/start in forward (fwd) direction is based on exceeding over-current pick-up/start value AND/OR undervoltage pick-up/start value (Fig. 2). Also, 2-phase earth-faults are included in the proposed short-circuit protection scheme (Fig. 2). In addition, correct current direction determination is required for final detection in forward direction.

Also, impedance- or admittance-based pick-up/start value could be possible with this scheme. In that case, impedance start value should be at least 105–110% of protected zone (MV line length) so that also possible infeed of multiple DG units in that zone (both MV and LV network connected DG units) could be taken into account and discrimination between 3-phase short-circuit faults in LV busbars or LV feeders at MV/LV substations could still be done.

Reverse Direction

Short-circuit protection fault detection (pick-up/start) in reverse (rev) direction is based on exceeding undervoltage

start value (Fig. 2). Overcurrent-based pick-up is not applicable, because fault current levels of inverter-based DG units can be quite low. In addition, final detection in reverse direction requires correct current direction determination. Unlike detection in forward direction, the detection in reverse direction is by default not allowed to give operate signal to corresponding circuit-breaker (Fig. 2). However, depending from the islanding possibility (i.e. power balance through CB before fault) and allowance to utilize intended island operation, operate signal can be allowed (Fig. 2). In other words, this means that transition to intentional island operation is possible only if active and reactive power unbalance (P_{unb} and Q_{unb}) through connection point CB is small enough (or there are enough rapidly controllable active and reactive power resources in the possible island) before protection start/operation in reverse direction. If this is not the case transition to island operation should be not allowed. During meshed or ring operation of MV feeders start criteria is similar in forward and reverse directions.

Direction Determination

Based on PSCAD simulations, in addition to traditional methods for fault current direction determination, $U_{pos\_seq\_angle}$ - $I_{pos\_seq\_angle}$ ($U_{pos\_seq\_angle}$ and $I_{pos\_seq\_angle}$ are voltage and current positive sequence angles respectively) based direction determination is possible during both 3- and 2-phase short-circuit faults as well as during 2-phase earth-faults. Also U_{0_angle} - I_{0_angle} (U_{0_angle} and I_{0_angle} are voltage and current zero sequence angles respectively) based angle determination could be possible in 2-phase-earth-faults in MV networks with isolated neutral treatment.

Voltage Dependent Time Delay

After fault detection in forward or reverse direction (Fig. 2) voltage dependent time delay of the proposed protection scheme is determined. The main idea is to use similar LVRT curves for calculation of MV feeder IED protection time delays (i.e. voltage dependent time delays) to those that are required from the DG units by the grid codes. This way it is easier to achieve selectivity with DG unit LVRT curves. Time delay of the proposed scheme is dependent on voltage dip magnitude, i.e. on the distance from the fault, so that the protection operation time delay is shorter than the operation time delay of DG unit LVRT curve (Fig. 3 and 4).

In Fig. 3, the example voltage-dependent operation time delay curves of the proposed scheme are shown from a case in which islanding is not possible and respectively in Fig. 4 from a case in which islanding is possible. In forthcoming ENTSO-E NC RfG DG unit LVRT requirements [7] are used as an example in Fig. 3 and 4. The calculation of the voltage-dependent time delay is based on the fact that voltage drop of lowest phase-to-phase voltage $U_{ph\_ph\_min\_pu}$ or $U_{pos\_mag\_pu}$-$U_{neg\_mag\_pu}$, ($U_{pos\_mag\_pu}$ and $U_{neg\_mag\_pu}$ are voltage positive and negative components respectively) due to short-circuit faults is not equal at every point of the MV distribution network. For example, time selectivity between MV feeder IED at HV/MV substation and IED at MV recloser / switching station further away from the HV/MV substation can be maintained if fault is at the end of MV feeder.

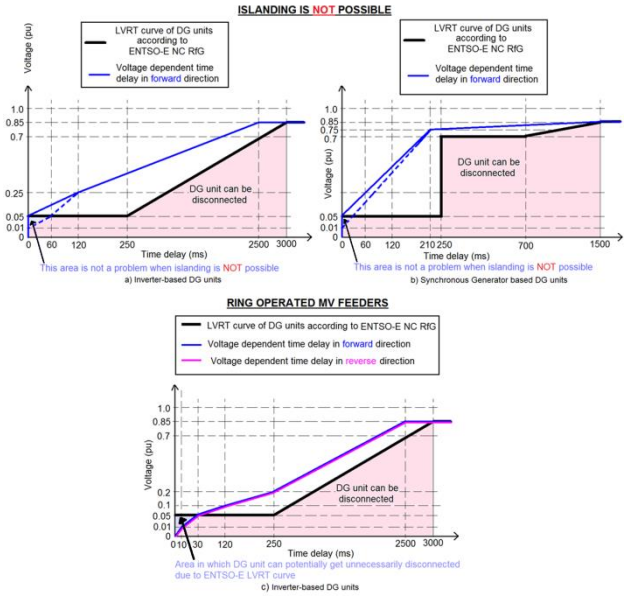

Figure 3. Voltage dependent operation time delay curve in forward direction when islanding is not possible a) with inverter-based DG units, b) with synchronous generator based DG units and c) during ring operation with inverter-based DG units (in forward and reverse directions).

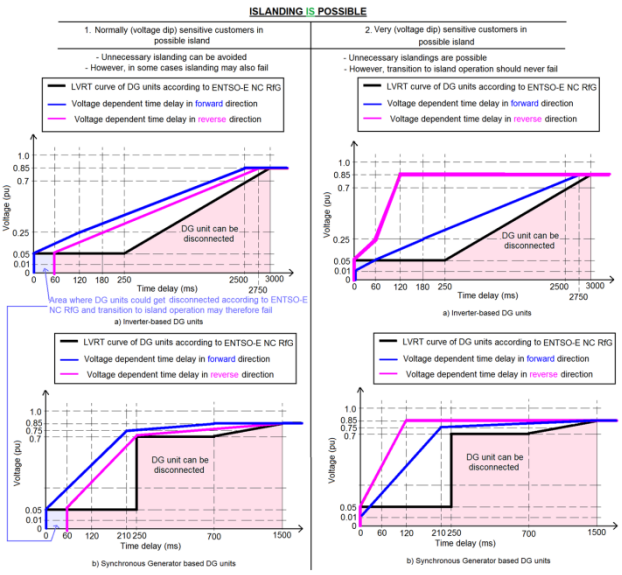

Figure 4. Voltage dependent time delay curve in forward and reverse directions when islanding is possible a) with inverter-based DG units and b) with synchronous generator based DG units.

Additionally, in 2-phase faults, for example, better selectivity is achieved by usage of lowest phase-to-phase voltage $U_{ph\_ph\_min\_pu}$ or $U_{pos\_mag\_pu}$-$U_{neg\_mag\_pu}$ instead of $U_{pos\_mag\_pu}$, which is often used in the grid codes for DG unit LVRT curves. In addition, to ensure selectivity also with short MV feeders, it is recommended to use lowest phase-to-phase voltage $U_{ph\_ph\_min\_pu}$ or $U_{pos\_mag\_pu}$-

$U_{neg\_mag\_pu}$. Based on the PSCAD simulations, the minimum protection zone length is 2–2.5 km with the proposed scheme without usage of high-speed communication. This depends also to some extent on grid code LVRT requirement.

In general, it should be noted that based on PSCAD simulations, voltage dip magnitude dependency of $U_{ph\_ph\_min\_pu}$ from distance to fault can be utilized only during normal operation, not during island operation. This is due to the fact that voltage dip is almost equal at different points of the islanded distribution network after fault during island operation.

SIMULATION RESULTS

In following, the proposed scheme to determine the voltage dependent time delays is presented by few example cases. ENTSO-E NC RfG [7] LVRT requirements for DG units (Fig. 3 and 4) are also used in these example cases. It should be noted that if there are both inverter-based and synchronous generator based DG units in the MV network, the protection settings (i.e. voltage dependent time delays in this case) of MV feeder IEDs should be selective and coordinated with the most demanding DG unit LVRT curve (i.e. LVRT curve of synchronous generator based DG unit). The scheme would then also naturally support the possible topology changes due to active network management schemes without the need of adaptation of protection settings.

For the sake of clarity, only the results from simulations with inverter-based DG units are reported. In addition, normally (voltage dip) sensitive customers (Fig. 4) have been assumed, i.e. time delay curves in reverse direction are chosen according to Fig. 4. Because time delay is calculated 30 ms after pick-up, 30 ms is the minimum possible time delay and 30 ms should therefore be added to the value taken for example from voltage dependent time delay curves in Fig. 3 and 4. 30 ms has therefore been added to the operation time delays shown in Tables II and III.

Case 1 (Radially Operated MV Feeders)

In Fig. 5 the location of the simulated faults in case 1 with radially operated MV feeders is shown. In Table I the fault types for case 1 with radially operated MV feeders (Fig. 5) are presented.

Table I. Fault types in Case 1 with rad. operated MV feeders (Fig. 5).

Fault	Fault Type
F1	3-phase short-circuit (fault res. R_f = 0.01 Ω) in MV grid
F2	2-phase short-circuit (fault res. R_f = 0.01 Ω) in MV grid
F3	3-phase short-circuit (fault res. R_f = 0.001 Ω) in LV grid
F4	3-phase short-circuit (fault res. R_f = 0.01 Ω) in MV grid
F5	2-phase short-circuit (fault res. R_f = 0.01 Ω) in MV grid
F6	3-phase short-circuit (fault res. R_f = 0.01 Ω) in MV grid
F7	2-phase short-circuit (fault res. R_f = 0.01 Ω) in MV grid
F8	3-phase short-circuit (fault res. R_f = 0.01 Ω) in MV grid
F9	2-phase short-circuit (fault res. R_f = 0.01 Ω) in MV grid

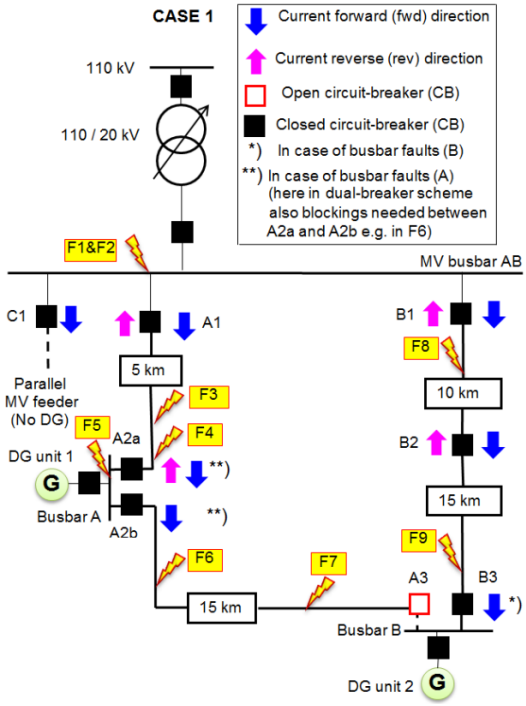

Figure 5. Case 1 with radially operated MV feeders and fault locations F1–F9.

Case 1 – No DG Units

In Table II, based on the PSCAD simulations, the operation time delays in forward (t_{fwd}) direction for different CBs (controlled by IEDs) are presented during different faults (Table I and Fig. 5) in case 1 without DG units i.e. DG units have been disconnected. In this case it should be noted that ENTSO-E RfG [7] based LVRT curve for inverter-based DG units (Fig. 3a) has been used in determination of protection operation time delays (Table II), because it was assumed that the disconnected DG units were inverter-based. Based on simulations, over-current pick-up/start value in forward direction could be 160 A (in order to detect all MV faults, but not to operate in LV side faults i.e. when back-up protection for LV side protection is not needed).

Table II. Operation time delays t_{fwd} for different CBs in Case 1 without DG units (Fig. 5 and Table I).

Fault	t_{fwd} for different CBs in Fig. 5				
	A1	A2a	A2b	B1	B2
	t_{fwd} [ms]	t_{fwd} [ms]	t_{fwd} [ms]	t_{fwd} [ms]	t_{fwd} [ms]
F4	145	-	-	-	-
F5	590	30	-	-	-
F6	545	30 *)	30 *)	-	-
F7	1931	1245 *)	1245 *)	-	-
F8	-	-	-	30	-
F9	-	-	-	2163	928

*) Here in dual-breaker scheme also blockings needed between A2a and A2b to maintain selectivity

Case 1 – Inverter-Based DG Units

In Table III, the operation time delays in forward (t_{fwd}) and reverse (t_{rev}) direction for different CBs are presented during different faults (Table I and Fig. 5) in case 1 with inverter-based DG units 1 and 2 (Fig. 5) according to the

proposed protection scheme (Fig. 2–4). DG units 1 and 2 are induction generators with full-converter interface (S_{n_inv} = 1.65 MVA). Otherwise, the used simulation model is to a large extent similar to those used in [5]. Also, the over-current pick-up/start value in forward direction was in this case 160 A.

Table III. Operation time delays t_{fwd} and t_{rev} for different CBs in Case 1 without DG units (Fig. 5 and Table I).

Fault	t_{fwd} and t_{rev} for different CBs in Fig. 5				
	A1	A2a	A2b	B1	B2
	t_{fwd} / t_{rev} [ms]	t_{fwd} / t_{rev} [ms]	t_{fwd} [ms]	t_{fwd} / t_{rev} [ms]	t_{fwd} / t_{rev} [ms]
F1	o) **90** X)	o) **(90)** X)	-	o) **90** X)	o) **(90)** X)
F2	o) **90** X)	o) **(90)** X)	-	o) **90** X)	o) **(90)** X)
F4	149	o) **90** X)	-	o) **208**	o) **(237)**
F5	572	30	-	o) **666**	o) **(689)**
F6	582	30 *)	30 *)	o) **671**	o) **(713)**
F7	1959	1272 *)	1272 *)	o) **2163**	o) **(2185)**
F8	o) **90** X)	o) **(90)** X)	-	30	o) **90** X)
F9	o) **2376**	o) **(2380)**	-	2156	910

*) Here in dual-breaker scheme also blockings needed between A2a and A2b to maintain selectivity, X) DG unit 1 (Fig. 5) could get disconnected and transition to island operation could fail due to ENTSO-E NC RfG [7] LVRT requirements, o) Small power unbalance (P_{unb}, Q_{unb}) => Islanding allowed i.e. operation in reverse direction if enough rapidly controllable DG, energy storage or controllable loads connected to intended island part of the network (largest possible island could be prioritized)

When comparing Table III to Table II, it can be concluded that t_{fwd} operation time delays are quite closely matched between cases without and with inverter-based DG units. For example, in F5 fault (Fig. 5), t_{fwd} of CB A1 is a bit longer without DG units (Table II) and in F6 fault t_{fwd} is slightly shorter without DG units (Table II) than with inverter-based DG units (Table III). Operation time in reverse direction t_{rev} is placed in brackets in Table III, if islanding is not possible or feasible from the power unbalance (Fig. 2) point of view of.

However, as can be seen from the simulation results in Table III, the operation time delays in forward and reverse directions based on Fig. 3 and 4 may become sufficiently long when faults are at the end of the radial MV feeders (like F7 and F9 faults in Fig. 5). Therefore, in practice it would be more feasible to use stricter t_{fwd} and t_{rev} operation time delay curves than those presented in Fig. 3 and Fig. 4.

CONCLUSIONS

A new future-proof directional short-circuit protection scheme for Smart Grids has been proposed in this paper. The proposed LVRT curve / network code compatible scheme enables the definition of protection operation time delays during normal, grid connected operation for intelligent electronic devices (IEDs) in MV distribution network having multiple protection zones without the need for high-speed communication. The proposed scheme is applicable for MV networks with different topologies (radial or ring). This scheme takes also into account the possibility of transition to intended island operation. In addition, the scheme is generally applicable with different LVRT curves defined in various grid codes.

In general, it is also worth mentioning that to support future active network management schemes with network topology changes (e.g. from radial to ring), the proposed scheme requires some central control which could be realized for example at HV/MV substation level in a similar manner as in [2] where grid automation controller COM 600 and low-bandwidth communication is used to change the setting groups of protection relays based on status of CBs. However, high-speed communication for protection purposes with the developed scheme would not be needed.

In the future studies, as an alternative to the method presented in this paper, the possibility to use distance to fault dependent protection operation time delay t_{fwd} as shown in Fig. 6 could be further evaluated. In Fig. 6 the distance calculation in kilometres (km) could be based on measured impedance (Z) or reactance (X) or admittance (Y) related values and under-impedance, -reactance, -admittance or -voltage based start could be used.

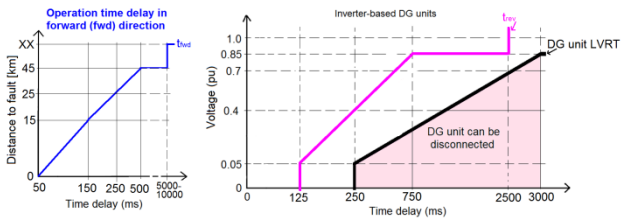

Figure 6. Possible alternative method to determine t_{fwd} operation time delay depending on the distance to fault (km) based on the measured Z or X or Y in Case 1 (Fig. 5) selectively with t_{rev} and DG LVRT curve.

Regarding Fig. 6 above, questions related to possible measurement inaccuracies could also be further studied. For example, it could be studied whether or not comparison of voltage measurements from different points of the network is more accurate and reliable method than comparison of measurements based on Z, X, or Y.

REFERENCES

[1] H. Laaksonen, F. Suomi, 2013, "New Functionalities and Features of IEDs to Realize Active Control and Protection of Smart Grids", *CIRED 2013*, Stockholm, Sweden.

[2] H. Laaksonen, D. Ishchenko, A. Oudalov, 2014, "Adaptive Protection and Microgrid Control Design for Hailuoto Island", *IEEE Transactions on Smart Grid*, vol. 5, no. 3, 1486-1493.

[3] H. Laaksonen, 2011, *Technical Solutions for Low-Voltage Microgrid Concept*, Ph.D. thesis, University of Vaasa, Vaasa, Acta Wasaensia 241, 2011.

[4] H. Laaksonen, 2010, "Protection Principles for Future Microgrids", *IEEE Transactions on Power Electronics*, vol. 25, no. 12, 2910-2918.

[5] H. Laaksonen, 2013, "Advanced Islanding Detection Functionality for Future Electricity Distribution Networks", *IEEE Transactions on Power Delivery*, vol. 28, no. 4, 2056-2064.

[6] CIGRE (Joint Working Group B5/C6.26/CIRED), 2014, *Protection of Distribution Systems with Distributed Energy Resources*, 2014.

[7] ENTSO-E, 2013, *ENTSO-E Network Code for Requirements for Grid Connection Applicable to all Generators (NC RfG)*, 2013.

[8] H. Laaksonen, 2014, "Reliable Islanding Detection with Active MV Network Management", *CIRED 2014 Workshop*, Rome, Italy.