OPTIMAL HARMONIC METER PLACEMENT FOR ESTIMATION OF HARMONIC SOURCES USING ARTIFICIAL INTELLIGENCE TECHNIQUES

Madiha EL-NAGAR
Arab Contractors-Egypt
madiha.elnagar@yahoo.com

Mahmoud SAYED
Cairo University – Egypt
fecu.msayed@gmail.com

Hosam YOUSEF
Cairo University – Egypt
hosamkm@yahoo.com

Fahmy BENDARY
Benha University – Egypt
fahmybendary10@gmail.com

ABSTRACT

This paper presents the solving of optimal harmonic meter placement problem. This problem involves determining the locations and number of meters to be installed in any system to achieve a full observability depth and minimize total cost of the devices. The results obtained are utilized to perform harmonic state estimation on power system network. Several algorithms are applied to the problem of optimal harmonic meter placement such as complete enumeration (CE), sequential method (SM), Genetic Algorithm (GA), Particle swarm optimization (PSO) and Linearized biogeography optimization technique (LBBO). Those algorithms are applied on two test systems to investigate their effectiveness in solving the harmonic meter placement problem.

INTRODUCTION

Modern power electronics is the state of the art and the tendency to use it more and more is increasing. Therefore, the generation of current at unwanted frequencies ought not to be allowed to grow without limit, because it may impact the public mains. As a consequence the harmonic content on the public networks has to be limited. Furthermore, the equipment connected to the mains has to show sufficient immunity in order to continue to operate as intended in the presence of a certain allowed harmonic distortion. Harmonic distortions are generally caused by equipment with nonlinear voltage/current characteristic and are mainly the result of modern electronic controlled power consumption.

Because of the distorted voltages and currents, different operational problems may occur such as equipment overheating, motor failures, mis-operation of protective equipment, inaccurate metering, and sometimes interference with communication circuits. As the amount of bus voltage distortion depends on harmonic content of the load currents, electric utilities are becoming more interested in determining the locations and magnitudes of these harmonic sources. This problem of determination of locations and magnitudes of the harmonic sources is generally termed as "reverse harmonic power flow problem" and to solve it, appropriate locations of the harmonic meters are very important.

The solving of optimal harmonic meter placement gained a continuous increasing interest in the past few years. In [1], the proposed method is applied on an unobservable system by adding new measurements using the gain matrix in order to make it observable. In [2], the proposed method redesign the measurement set using the topology of the network. In which, a measurement configuration with a minimum number of measurements is determined. This configuration satisfies the observability constraints. Then the measurement configuration is re-optimized to reduce the number of measurement devices to be placed based on the network topology. The decomposition technique used in [3], in which the entire network of the power system is first decomposed into smaller subsystems, in this method the optimal locations of measurement placement are obtained using the minimum condition number criteria. A sequential technique is used in [4] for optimal sensor placement for under-determined case of harmonic static state estimation has been developed, in which the number of unknown quantities is greater than the number of measurements. In [5], a minimum condition number criterion of measurement matrix, based on sequential elimination is proposed.

ARTIFICIAL INTELLIGENCE TECHNIQUES

Artificial intelligence techniques are general purpose optimization algorithms; they will do well on, in principle, any type of problem, but may not be as efficient on a specific problem as an algorithm specifically designed to solve it. This is a major advantage of those algorithms, that their efficiency or applicability is not tied to any specific problem-domain .Modern heuristic methods have evolved in the last decades that facilitate solving optimization problems that were previously difficult or impossible to solve. These methods include evolutionary computation, simulated annealing, Genetic algorithms, Ant colony and particle swarm.. In this paper several modern heuristic methods are used in the problem of optimal harmonic meter placement.

Genetic algorithms

Genetic algorithms (GA) are basically search mechanisms based on Darwinian principle of natural evolution. They are the result of research done to

incorporate the adaptive process of natural systems into design of artificial systems. GAs work with the coded structures of the variables instead of the actual variables themselves. They use multiple point searches instead of single point search, thereby identifying more peaks and reducing the probability of getting stuck in local optima. The only information needed is the objective function thereby making the implementation simpler.

Particle swarm optimization technique

Swarm means a large group [6]. It is generally used to describe social insects or social animals. PSO was originally designed and developed by Eberhart & Kennedy as an alternative to the standard Genetic algorithm (GA). This technique relies on the exchange of the information between the particles of the swarm. In effect, each particle adjusts its trajectory towards its own previous best position, and towards the best previous position attained by any member of its neighborhood. In the global variant of PSO, the whole swarm is considered as the neighborhood. Thus, global sharing of information takes place and particles profit from the discoveries experience of all other companions during the search for promising regions of the landscape.

Linearized biogeography optimization technique

BBO is a population based, stochastic optimization technique developed by Dan Simon in 2008, which is based on the concept of biogeography that deals with nature's way of distribution of species. Distribution of a species from one place to another is influenced by factors such as rainfall, diversity of vegetation, diversity of topographic features, land area, temperature etc. Areas, where these factors are highly favorable tend to have a larger number of species, compared with a less favorable area. Movement of species from one area to another area facilitates sharing of their features with each other. Owing to this movement, the quality of some species may improve due to exchange of good features with better species. In context of biogeography, a habitat is defined as an Island (area) that is geographically isolated from other Islands. An island is any habitat that is geographically isolated from other habitats. We therefore use the more generic term "habitat" (rather than "island"). Geographical areas that are well suited as residences for biological species are said to have a high habitat suitability index (HSI). Features that correlate with HIS are called suitability index variables (SIVs) [7]. Each solution in BBO has two solution parameters; the immigration rate λ and the emigration rate μ are functions of the number of species in the habitat where; emigration is the sharing of a solution feature in BBO from one individual to another. The emigrating solution feature remains in the emigrating individual. This is similar to emigration of a species in biogeography, in which representatives of a species leave an island but the species does not become extinct from the emigrating island [8] and immigration: The replacement of an old solution feature in an individual with a new solution feature from another individual. The solution feature comes from the contributing individual by way of emigration. The immigrating solution feature replaces a feature in the immigrating individual. We use the emigration and immigration rates of each solution to probabilistically share information between habitats. The BBO migration strategy is similar to the global recombination approach of the breeder GA and evolutionary strategies in which many parents can contribute to a single offspring, but it differs in at least one important aspect. In evolutionary strategies, global recombination is used to create new solutions, while BBO migration is used to change existing solutions. Global recombination in evolutionary strategy is a reproductive process, while migration in BBO is an adaptive process; it is used to modify existing islands. As with other population-based optimization algorithms, we typically incorporate some sort of elitism in order to retain the best solutions in the population. This prevents the best solutions from being corrupted by immigration. The basic structure of BBO algorithm is as follows:

Step 1: Initialize the BBO parameters, including the maximum migration rates E and I , the maximum mutation rate m_{max} , and the minimal emigration rate θ. We also initialize the maximum species count S_{max}. Migration rate is similar to crossover rate in GAs. Mutation rate is the same as in GAs.

Step 2: Initialize a random set of habitats, each habitat corresponding to a potential solution to the given problem.

Step 3: For each habitat, map the fitness to the number of species k, the immigration rate λ_k , and the emigration rate μ_k based on migration models.

Step 4: Probabilistically use immigration and emigration to modify, then compute each habitat's fitness.

Step 5: For each habitat, update the probability of its species count. Then mutate each habitat and re-compute each habitat's fitness.

Step 6: Go to step 3 for the next iteration. This loop can be terminated after a predefined number of generations or after an acceptable problem solution has been found.

One drawback of BBO is that it performs poorly when applied to non-separable functions. To address this drawback BBO is linearized BBO migration is linearized in to make it more rotationally invariant by linearization of BBO migration. Another weakness of BBO is its local search ability by applying the descent to BBO. Next, since many real-world optimization solutions lie on constraint boundaries. Next, in order to systematically cover the search space, we add a global grid search strategy. Next, in order to systematically cover the search space in a region near the current best individual, we add a Latin hypercube search strategy. Finally, we include re-initialization and restart strategies.

PROBLEM FORMULATION

Two different approaches are proposed to determine the optimal number and location of harmonic meters. These approaches are based on optimal allocation cost function and minimum variance criterion.

Optimal allocation cost function

The cost function is the objective function in this case [9]. The cost function (CF) consists of two main parts as follows:

$$CF=CF_1+CF_2 \quad (1)$$

The description of both CF_1 and CF_2 is as follows:

Observability depth term (CF1):

The first part of the problem cost function, which calculates the penalty of breaking the desired observability depth (ν). It is illustrated in the formula in (2) and (3). K_1 in eq. (2) is a constant, which is set to be 1. MD is a matrix in which its rows represent the distances of certain meter connected to bus to all system buses, and its columns show the distance of certain system bus to each meter's connected bus.

$$CF_1=K_1 x\Sigma[10^{\alpha}-1] \quad (2)$$

$$\alpha=(1stmin(MD)round((\nu+3)/2)+ (2ndmin(MD)ceil((\nu+3)/2)) \quad (3)$$

Where;

ceil : is rounding the number towards plus infinity.

Number of used meters term (CF2):

The second part CF_2 of the cost function is for the number of meters which are used. The formula of CF_2 is illustrated in equation (4), in which K_2 is a constant, set to be 1. N_{meters} is the number of meters used.

$$CF_2=K_2 x N_{meters} \quad (4)$$

Minimum variance criterion

In n-bus system, at any particular operating frequency, the bus voltages and the bus injection currents are related by [10]:

$$V_{bus}=Z_{bus}*I_{bus} \quad (5)$$

Where Z_{bus} is the bus impedance matrix of the system. Suppose that bus voltages and the bus injection currents at certain buses are observed. Let these be denoted by the vectors Vo and Io, respectively. Also, let Vu, Iu denote the vectors of the voltages and currents respectively at the remaining unmeasured buses. Partition of eq.(5) in terms of the observed and unobserved vectors yields to:

$$\begin{bmatrix} V_u \\ V_o \end{bmatrix} = \begin{bmatrix} Z_{uu} & Z_{uo} \\ Z_{ou} & Z_{oo} \end{bmatrix} \begin{bmatrix} I_u \\ I_o \end{bmatrix} \quad (6)$$

The basic objective of this method is to select the measurements (from the set of all possible measurement locations) that will minimize the expected value of the sum of squares of differences between estimated and actual parameter variables. Application of this minimum variance criterion to the problem of estimation of harmonic sources results in the following optimization problem:

$$\text{Minimize:} \min_{\hat{I}_u} \{ \min_{\hat{I}_u} \{ E(\hat{I}_u - I_u)^2 \} \} \quad (7)$$

With respect to the locations of I_o and V_o. The above problem is solved in two steps.

- In the first step, a predicted current $\hat{I}_u$ is determined to minimize the value of the square of the difference between the unknown current vector and the true current vector I_u.
- In the second step, the best measurement locations, represented by Io and V_o, that minimize the error due to the best linear predictor $\hat{I}_u$, are found.

The theory needed to solve eq.(7) following these two steps is given below: We assume that random vector I = (I_u, I_o) is Gaussian. This provides an adequate model for the occurrence of harmonic sources in a power system and yields a tractable mathematical model on which to base the estimation. If I and V are random variables with finite second moments, then the predictor of X_u which minimizes the variance of the error is the conditional expectation. Therefore, this conditional mean is a valid choice as an estimator of I_u. Assuming I is Gaussian, we can see from eq. (7) that V is jointly Gaussian and we can write:

$$\begin{bmatrix} V_u \\ I_u \\ V_o \\ I_o \end{bmatrix} = \begin{bmatrix} Z_{uu} & Z_{uo} \\ 1 & 0 \\ Z_{ou} & Z_{oo} \\ 0 & 1 \end{bmatrix} \begin{bmatrix} I_u \\ I_o \end{bmatrix} \quad (8)$$

If we now assume that harmonic sources at distinct buses are uncorrelated, the solution of eq. (7) is simplified. In this case, the variance matrix for the existence of harmonic sources is diagonal. Thus, a priori information about the likelihood of occurrence of the harmonics at each bus may be easily incorporated in such a model by matrix:

$$\sigma^2 = \begin{bmatrix} \sigma_u{}^2 & 0 \\ 0 & \sigma_o{}^2 \end{bmatrix} \quad (9)$$

Where: σ_u and σ_o are diagonal sub-matrices modeling a priori probability of existence of harmonic sources for the unknown (not measured) buses and observed (measured) buses, respectively. The values in eq. (9) are to be determined from bus load levels and from prior information on the likelihood of particular buses being harmonic sources. Any a priori knowledge should be incorporated since it has some useful value. If a bus has no load, it cannot be a source of harmonics. Also, if a bus consists mostly of industrial customers, then it should be assigned a higher probability of being a harmonics source than a bus that has mostly residential customers.

Using (7) - (9) to determine the covariance matrices and cross-covariance matrices, we obtain:

$$Cov\begin{bmatrix} V_u \\ I_u \\ V_o \\ I_o \end{bmatrix} = \begin{bmatrix} Z_{uu}\sigma_u^2 & Z_{uo}\sigma_o^2 \\ \sigma_u^2 & 0 \\ Z_{ou}\sigma_u^2 & Z_{oo}\sigma_o^2 \\ 0 & \sigma_u^2 \end{bmatrix} \begin{bmatrix} Z_{uu}^T & I & Z_{ou}^T & 0 \\ Z_{uo}T & 0 & Z_{oo}^T & I \end{bmatrix} \quad (10)$$

Rewriting eq. (10) in terms of the variables needed for the minimization problem yields to:

$$Cov\begin{bmatrix} V_u \\ I_u \\ V_o \\ I_o \end{bmatrix} = \begin{bmatrix} \sigma_u^2 & \sigma_u Z_{ou}^T & 0 \\ Z_{ou}\sigma_u^2 Z_{ou}^T \sigma_u Z_{ou}^t + Z_{oo}\sigma_o^2 Z_{oo}^T & Z_{oo}\sigma_o^2 \\ 0 & \sigma_o Z_{oo}^T & \sigma_o^2 \end{bmatrix} \quad (11)$$

The covariance of the estimation error is given by:

$$Cov(\hat{I}_u - I_u) = Var(\hat{I}_u) - Cov(I_u, V_o I_o) Var(V_o I_o)^{-1} Cov(V_o I_o, I_u) \quad (12)$$

By using (7) - (12) to solve for the conditional error covariance matrix, we obtain:

$$Cov(\hat{I}_u - I_u) = \sigma_u^2 - \sigma_u^2 Z^T_{ou}(Z_{ou}\sigma u^2 Z^T_{ou})^{-1} Z_{ou}\sigma_u^2 \quad (13)$$

In the above expression, σ_u is a constant matrix representing a priori probability of existence of harmonic sources for the unknown (not measured) buses. This matrix is obtained by appropriately partitioning the matrix σ, which models a priori probability of existence of harmonic sources at all the buses in the system. Hence, the objective of the above optimization problem is to determine the appropriate Z_{ou} matrix (i.e. to choose the appropriate measurement locations) so as to minimize the trace of the covariance Cov $(\hat{I}_u - I_u)$.

CASE STUDIES

IEEE 14-bus system

Figure (1) shows the single line diagram and the location of the non-linear loads of this system. The complete data of this system is given in [11]. The priori probability matrix σ is assumed to be diagonal [0.1, 0.1, 0.1, 1, 1, 1, 0.1, 0.1, 0.1, 0.1, 0.1, 0.1, 0.1, 1].

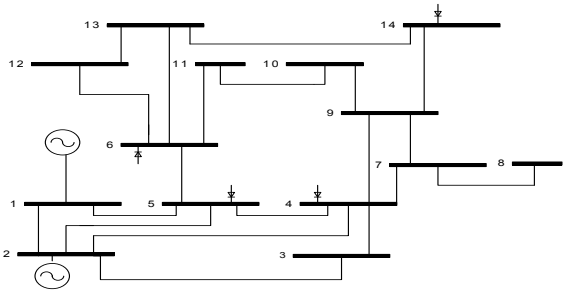

Figure (1): IEEE 14-bus system

Table (1): Comparison between solution techniques of IEEE 14-bus system

Method	Number of meters	Location of meters
Complete Enumeration (CE)	9	1, 3, 6, 7, 8, 10, 11, 13 and 14
Sequential Method (SM)	9	1, 3, 9-11, 6, 7, 8, 13 and 14
Binary Genetic Algorithm (BGA)	9	1, 3, 6, 7, 8, 10, 11, 13 and 14
Binary Particle Swarm Optimization (BPSO) using objective function (1)	6	2, 8, 11, 12, 13 and 14
Discrete Particle Swarm Optimization (DPSO) using objective function (2)	6	2, 4, 6, 7, 9 and 10
Linearized biogeography optimization technique (LBBO) using objective function (1)	4	7, 8, 9 and 10
Linearized biogeography optimization technique (LBBO) using objective function (2)	6	3, 5, 10, 12, 13 and 14

IEEE 30-bus system

Figure (2) shows the single line diagram and the location of the non-linear loads of this system. The complete data of this system is given in [12]. The priori probability matrix σ is assumed to be diagonal [0.1, 0.1, 0.1, 0.1, 4, 0.1, 4, 4, 0.1, 0.1, 0.1, 4, 0.1, 0.1, 0.1, 0.1, 0.1, 0.1, 0.1, 0.1, 0.1, 0.1, 0.1, 0.1, 0.1, 0.1, 0.1, 0.1, 0.1, 0.1,0.1].

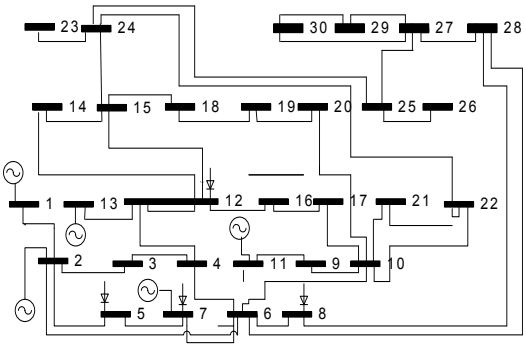

Figure (2): IEEE 30-bus system

Table (2): Comparison between solution techniques of IEEE 30-bus system

Method	Number of meters	Location of meters
Binary Particle Swarm Optimization (BPSO) using objective function (1)	17	2, 4, 7, 8, 9, 12, 13, 17, 18, 19, 20,21, 22, 23, 24, 25 and 27
Discrete Particle Swarm Optimization (DPSO) using objective function (2)	16	1, 4, 6, 7, 9, 10, 11, 13, 15, 16, 19, 21, 22, 25, 26 and 27
Linearized biogeography optimization technique (LBBO) using objective function (1)	15	1, 2, 3, 4, 5, 6, 7, 8, 9, 11, 12, 13, 15, 16 and 28
Linearized biogeography optimization technique (LBBO) using objective function (2)	16	1, 2, 4, 5, 6, 7, 9, 12, 14, 16, 19, 20, 22, 24, 25, 27, 30

CONCLUSIONS

Several optimization techniques were applied on test systems to solve the previously stated problem. The simulation results clear that Linearized biogeography optimization technique provided us with the optimal number and locations of harmonic meter placement with full observability depth on both objective functions, a goal which is achieved in a precise way comparable to other techniques.

REFERENCES

[1] A. Abur and B. Gou, "An improved measurement placement algorithm for network observability", *IEEE Trans., Power systems*, Vol. (16), no.(4), pp. 819–824, 2001.

[2] G., Huang, J. Lei, and A. Abur, , "A heuristic approach for power system measurement placement design", *Proceedings of the International Symposium on Circuits and Systems*, 2003.

[3] C. Rakpenthai, ,S. Premrudeepreechacharn, S. Uatrongjit, , and W. Neville, "Measurement placement for power system state estimation using decomposition technique", *In 11th International Conference on Harmonics and Quality of Power*, 2004.

[4] J.E. Farach, W.M. Grady and A. Arapostathis, "An optimal procedure for placing sensors & estimating the locations of harmonic sources in power systems", *IEEE Trans., Power Delivery*, Vol.(8), no.(3), July 1993.

[5] C. Madtharad, S. Premrudeepreechacharn, N.R. Watson and R. Saeng-Udom, "An optimal measurement placement for power system harmonic state estimation", *IEEE Trans., Power Delivery*, Vol. (20), no. (2), April 2005.

[6] Yu, X., Gen, M., 2010, "*Introduction to evolutionary algorithm*" Springer Verlag, London, UK, 272.

[7] D. Simon, "Biogeography-based optimization", *IEEE transaction on evolutionary computation*, Vol. 12, No. 6, December 2008.

[8] D. Simon, "A dynamic system model of biogeography-based optimization", *Elsevier Applied soft computing 11*, 2011, 5652-5661.

[9] El-Amary N.H., Mostafa Y.G., Mansour M.M., Mekhemar S.F., "Phasor Measurements Units' allocation in unified electrical power network of Egypt", *Power Tech, 2009 IEEE Bucharest.*

[10] A. Kumar, B. Das and J. Sharma, "Genetic algorithm based meter placement for state estimation of harmonic sources", *IEEE Trans., Power Delivery*, Vol. (20),. (2), April 2005.

[11] Kodsi, S.A.M. and Caňizares, C.A, "Modeling and simulation of IEEE-14 bus system with facts controller", *Tech. Report*, No.3, 2003.

[12]http://www.ee.washington.edu/research/psta/[Online]