PROTECTION NEEDS FOR GRIDS WITH HIGH PENETRATION OF DISTRIBUTED GENERATION, STORAGE DEVICES AND ELECTRIC VEHICLES

Mojtaba KHEDERZADEH
Faculty of Electrical Engineering, Shahid Beheshti University, A.C., Tehran, IRAN
khederzadeh@pwut.ac.ir

ABSTRACT

Electric Vehicles (EVs) are the future of the rapidly increasing low emission transportation market. Proper integration of EVs would help to shift the electric demand, shave the peak and operate as a distributed energy storage device when vehicle-to-grid (V2G) is available. Besides all the advantages inherent to the progressive usage of EVs in near future, there is an issue that is not adequately dealt with and studied in the literature; this point is the impact of high penetration of EVs on the protection of distribution feeders. When V2G functionality is available and a lot of EVs are connected to the grid, the short-circuit level of the distribution system is affected as the EVs could inject energy to the grid. Although the energy of each individual EV is negligible, the fleet of EVs could not be ignored. This motivates an investigation to analyze the case and observe the results. Different models for V2G are analyzed to investigate the contribution of EVs to the fault current. It is assumed that the distribution feeders have overcurrent protection relays set without considering the impact of EVs. It is shown that modelling the EVs with their power electronic interfaces (charger/inverter) is the crucial point in this study. The simulation results highlights whether connection of a large fleet of EVs into the distribution network has any impact on short-circuit level of the feeders and whenever the short-circuit level is changed, what is the extent of its impact on the coordinated overcurrent relays. This study is performed with different cases to analyze the impact of different EVs' parameters such as their random initial SOC, location of the fleet of EVs on the feeder and so on.

INTRODUCTION

Electric vehicles (EVs) are the future of transportation, so it is foreseen that significant amount of EVs would be penetrated at distribution level due to the rapidly growing low emission transportation market. The increase of penetration level of distributed generation leads to the decrease of large conventional generator units, therefore the short-circuit level is affected in the transmission/distribution systems. As the EV's technology is developing very fast, it is expected the cost would be compromised, so the number of EVs would be progressively increased leading to new issues in the conventional distribution systems. Depending on the way the issues related to the connection of EVs to the grid are dealt with, threats and opportunities are provided [1].

A threat could be a significant rise of the peak load if the charging of EVs is not properly managed. On the other hand, an opportunity could be the mitigation of the frequency fluctuations and balancing out the power caused by the high penetration of wind power [2]-[3]. The charging of EVs could be stopped in emergencies, so they could be treated as interruptible loads without any penalty. Another opportunity presented by EVs is using the EVs as a source of energy to provide grid support; this approach is known as vehicle to grid (V2G). Hence, by the V2G concept, the EVs could be treated as controllable loads which can be used as a source or sink of power as required by the power system. In this regard, an aggregator is required that the EVs could be connected to at the parking lots which communicates with the grid and the Transmission System Operator (TSO) [4]. Thereby, in the point of view of a TSO the aggregators are large battery storage devices with the ability to send a command in order to provide or store energy. Upon request by the TSO, the aggregator issues control signals to individual EVs or a fleet of EVs. The concept of V2G is beneficial for both the EV owners and utilities as the EVs could be charged at low tariffs and discharged when the electricity prices are high. Meanwhile, the stress caused by a high penetration of EVs on the existing distribution infrastructure is alleviated by regulating their charging [5]-[9].

EVs could charge their batteries from a standard outlet at home or from a charging booth. When a fleet of EVs are connected to the grid, a sudden discharge of their energy based on the V2G concept may cause a voltage swell at the related distribution point of connection. Hence, it is required to properly manage this bilateral power flow between the EVs and the grid in order to maintain grid stability [10].

Figure 1 shows a schematic of a typical V2G setup. As can be seen from this figure, a fleet of EVs are connected to the grid through an aggregator, meanwhile connection of individual EVs are also allowed.

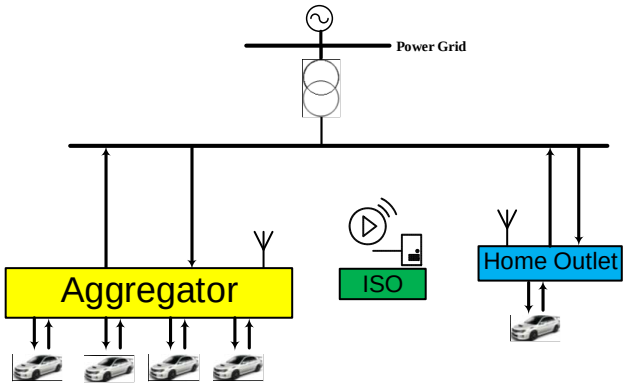

Figure 1: Schematic of a general V2G system.

Besides all the advantages inherent to the progressive usage of EVs in near future, there is an issue that is not adequately dealt with and studied in the literature; this point is the impact of high penetration of EVs on the protection of distribution feeders. When V2G functionality is available and a lot of EVs are connected to the grid, the short-circuit level of the distribution system is affected as the EVs could inject energy to the grid. Although the energy of each individual EV is negligible, the fleet of EVs could not be ignored. This motivates an investigation to analyze the case and observe the results.

To the knowledge of the author, there is no work in the literature dealing with the contribution of EVs on the fault current and their impact on the distribution system protection. Some references could be found that represents the results of investigation of the behavior of Inverter-based Distributed Generation (IbDG) during a fault and the associated protection issues. In [11] synchronous-based DG is compared with IbDG for fault current limitations and protection issues. It is mentioned that the employed technology for the IbDG is strongly correlated with its contribution to the fault current. However, irrespective of the applied technology, the contribution is the lowest for the IbDGs. It is clearly shown that impact of IbDGs on the protection is not negligible. Some simulations show a magnitude of 1.5 times the full current. It is stated that synchronous generators have higher fault levels than corresponding induction generators with three stages during faults as subtransient with duration of 0-50ms, transient with duration of 50ms-1s, and finally steady-state after more than one second. As the synchronous generators have excitation system so, their contribution to the fault current is the highest. In contrast to the synchronous generators, the excitation of the induction generators is magnetically fed from the power system, so the excitation is lost whenever its terminal is short-circuited resulting in a collapse of the fault current contribution. Currents are decreased to significantly after 100-300 ms, so their contribution to the steady state fault current is negligible. Contribution of IbDG under fault conditions is determined by the applied employed control methods. In [12] the fault contribution in the presence of PV grid-connected systems is presented. As the connection of PVs by a power-electronic interface could be to some extent the same as a fleet of EVs, so it is referred to. It is claimed that to it is explained that the IbDG injects current into the distribution grid during a fault until the fault is cleared. Then it is needed that the inverter successfully identifies the islanding condition and stops energizing. The point of concern in [12] is stating that the IbDG inevitably increases the fault current in comparison to its level before installation of IbDG, so this may affect the relays' settings or even ratings. According to [12], the contribution of the PV generators on the fault currents is ignored, historically, and only the effects of synchronous DGs have been considered. The effects of IbDGs have been assumed negligible due to their relatively small system size; therefore, the injected current was limited to the inverter rating. However, as the IbDGs are penetrating progressively into the distribution system their influences could no longer be considered minimal.

In [13] the contribution of fault from synchronous machines and IbDGs are compared. The paper presents a model of IbDGs for analyzing the dynamic performance of the power system. The simulations are performed by installing 4 DGs with 5MVA ratings. The results show that although the increase of fault current for synchronous DGs is 1.24 times the fault current with no DG, it is 1.2 times with the same rating IbDGs. It means that synchronous DGs exhibit 20% higher current than IbDGs, but the contribution IbDGs is 20% and not negligible. In [14] the fault contribution of grid-connected inverters is investigated. It is concluded that the IbDGs could stop injecting current within the first cycle or few cycles after inception of a fault. This achieved by using very sensitive instantaneous over-current protection relays with the support under-voltage detection scheme. They have reached to this conclusion that the short-circuit contribution of IbDGs are insignificant, in the range of 1.1-1.5 times their nominal currents strictly lower than 4-10 of synchronous DGs. It is worth mentioned that in the worst case, the contribution of an IbDG will not exceed 1.5 p.u.

In [15] fuzzy logic controller is used to implement V2G infrastructure. The V2G concept is explored through simulation of a typical distribution system of a real city in India. Fuzzy logic controllers are used to control the power flow between EVs and the grid subject to improvement of voltage stability and peak demand management. Simulation results show the potential of charge/discharge of EVs; as power leveling and peak saving by charging of EVs during off-peak hours and discharging the EVs energy during peak hours could be provided by the proposed controller.

In this paper, the contribution of EVs to the fault current is analyzed and next their impact on the distribution feeder protection is investigated. It is assumed that the distribution feeders have overcurrent protection relays set without considering the impact of EVs. Modeling of the EVs with their power electronic interfaces (charger/inverter) is very crucial in this study. It is required to consider the protective elements in the model to avoid excess current and extra voltage. The simulation results shed light on this question: whether connection of a large fleet of EVs into the distribution network has any impact on short-circuit level of the feeders and whenever the short-circuit level is changed, what is the extent of its impact on the coordinated overcurrent relays. This study is performed with different cases to analyze the impact of different EVs' parameters such as their random initial SOC, location of the fleet of EVs on the feeder and so on. It is found that the fault location has remarkable importance on the behavior of the EV's interface with the grid, as their protective elements are sensitive to the voltage and current which both of them are dependent on the point of the fault. Another important question in this regard is: whenever the fleet of EVs is connected to the grid and the related feeder is disconnected from the upstream network, is there is any risk of islanding or is there any danger for the human? Is it necessary to disconnect the fleet of EVs like the DGs when their feeder is disconnected from the main grid according to the associated standards? As already explained, modeling the V2G system greatly affects its participation in the fault current, so different modeling approaches are discussed.

V2G MODELING

Figure 2 shows the specified structure of a V2G system during a fault on the grid. As the EVs could be treated as IbDGs, so it is expected to contribute in the fault current. Thereby it is necessary to model the EV for short-circuit studies. Unfortunately, most of the proposed models are developed for steady-state analysis neglecting the dynamics of the model. For example a sophisticated V2G model is proposed in [16] implemented by DigSilent package. It is worth noting there is a 6-pulse bridge as a built-in model in DigSilent which could be selected as inverter/rectifier. It is explained that typically the line-commutated converters are neglected during short-circuit calculations because the thyristors are automatically blocked during very low voltages at the AC side, which is the case during short-circuits, thereby, low short-circuit currents are supplied by the converter. It is mentioned that the short-circuit calculation methods by the VDE, IEC or ANSI standards do neglect the contribution of the converters. However, if a "complete-method" short-circuit calculation is performed, the short-circuit current of the converter will not be neglected but defined being the rated AC current of the converter. Moreover, if the converter is used as a variable speed driver, the contribution of the converter to the fault current is no longer neglected in the VDE 0102/0103 and IEC 60909 calculation methods. So, an option is introduced in DigSilent as "static converter-fed drive". Hence, the converters are assumed as asynchronous machines with a short-circuit current ratio of $I_{shc}/I_{rated} = 3$ and $R/X = 3$ according to the above standards. As mentioned in the DigSilent's user manual, the contribution of short-circuit current is only considered in symmetrical short-circuits. For asymmetrical short-circuits, the contribution of fault current is neglected for static converter drives. The contribution is only used in calculating the initial and the peak short-circuit currents. As indicated, the ANSI and the complete calculation methods are not affected by this option. So, the inherent inverter models developed in DigSilent are not applicable for the integration of EVs in short circuit studies. Hence, it is required that a very detailed and sophisticated model to be developed for such a study by DSL simulating language.

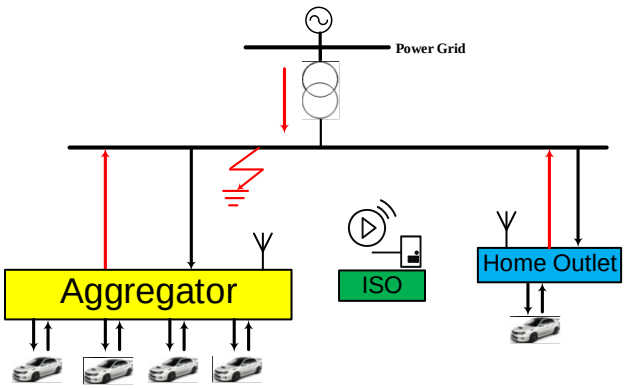

Figure 2: Contribution of EVs during a fault in the grid

SIMULATION RESULTS

In order to study the behavior of an EV during a fault, 3 Voltage-Sourced Converters are simulated. Model 1 is composed of 6 IGBTs and 6 anti-parallel diodes, so it is a detailed model. In model 2 Switching-Function is used and switches are replaced by two voltage sources on AC side and a current source on DC side. This model uses the 6 IGBT pulses as control input the same as model 1, so, this model represents the generated harmonics by the VSC correctly. An average-model type is applied as model 3. This model uses 3 reference signals as 3 average voltages generated at AC-side terminals in contrast to model 2 which uses pulses. Model 3 is a sophisticated model and does not exhibit harmonics and larger sample times could be applied, i.e., even 10 times larger than required by model 1 as detailed model. Model 3 preserves the dynamics of the average voltage. It is assumed in models 2 and 3 that the VSC is ideal, i.e., the instantaneous AC and DC powers are equal and the losses are neglected.

Figure 3 shows the currents of phase *a* of all the inverters at the AC side for normal operation. As can be deduced from this figure, model 3 could be evaluated as a premature model presenting no harmonics. Nominal voltage is assumed equal 400 V. The sample inverter resembling an EV is composed of a battery, connected to a 3 phase VSC and the output is feeding a three-phase load. In this study the short circuit at the terminals of the AC-side of the inverter is investigated in order to show the impact of modeling and control system on the short-circuit current of the inverter.

Figure 4 shows the analysis of inverter model 1. As can be deduced from this figure, the voltages at the terminals of the inverter are preserved, while the voltage after the isolating transformer (a 1:1 transformer at the terminals of the inverter to isolate the load from the inverter) is affected by the short circuit. The battery is assumed ideal in this case, so the output short-circuit current is significant, nearly 20 times the load current. Voltages and the load currents are recovered after clearing the fault. The fault inception time is 1/60 and removed at 5/60 s.

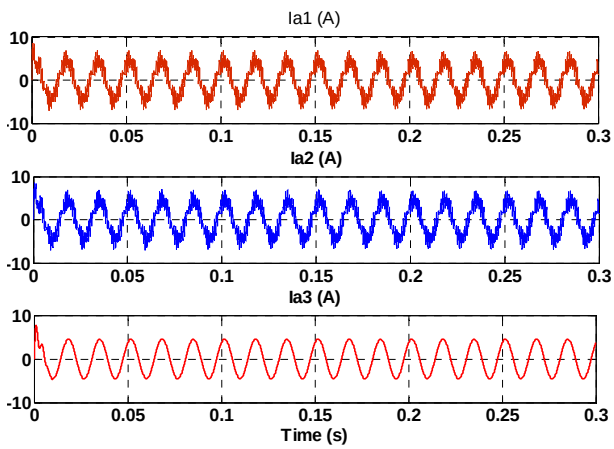

Figure 3: Phase *a* currents of model 1 to 3 of the sample VSC-based inverters.

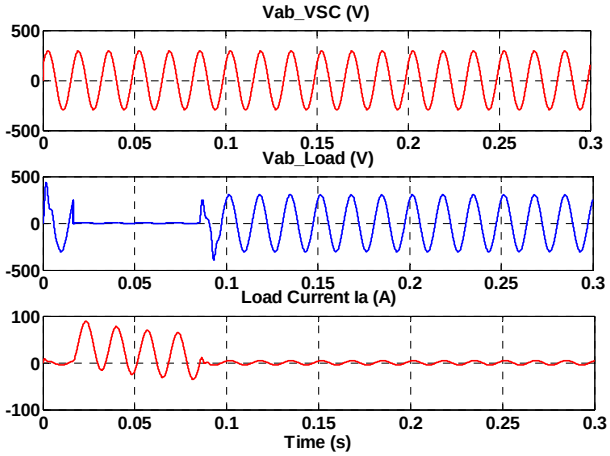

Figure 4: 3 phase short-circuit at the AC terminals of the inverter model 3, (a) voltage at the output of VSC, (b) voltage at the load, (c) Output current of the inverter.

Figure 5 shows the same test but on Model 2. As can be seen from this figure, the generated voltage of the inverter is not sinusoidal. As the dc source is considered ideal, so the short-circuit current is nearly the same as Model 3. Figure 6 shows the same scenario; but the inverter is a detailed one (model 1) with ideal dc source. Comparison of models 3 to 1 based on Figures 4-6 reveals that the internal structure of the inverter has not affected the amplitude of the short-circuit current, but this is not the case in reality, as the switches are sensitive to the current amplitude, so modeling the protective elements of the switches and current limiters is required. It can be concluded that modeling details greatly affects the expected short-circuit current. Another point is that the battery should be modeled in detail for this kind of study; otherwise the results are not reliable. As the model of the battery is crucial, the ideal dc source is replaced with a generic model of the battery with scalable SOC, battery capacity, internal resistance, etc., available in MATLAB/Simulink based on [17]. Figure 7 shows the current outputs of model 3 with ideal dc source and a developed battery model. In this case SOC=100% and the internal resistance of the battery is 0.4 ohms.

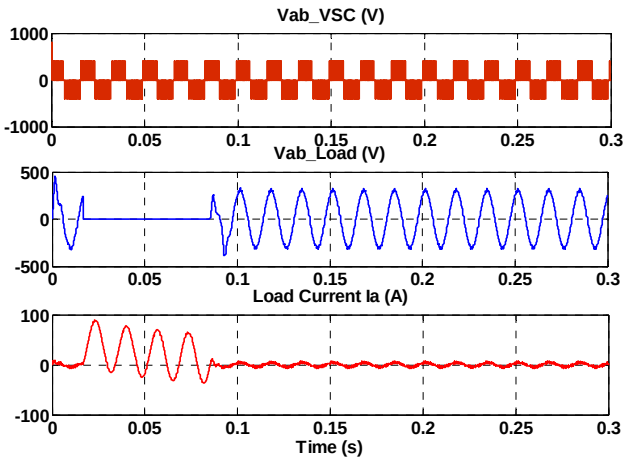

Figure 5: 3 phase short-circuit at the AC terminals of the inverter model 2, (a) voltage at the output of VSC, (b) voltage at the load, (c) Output current of the inverter.

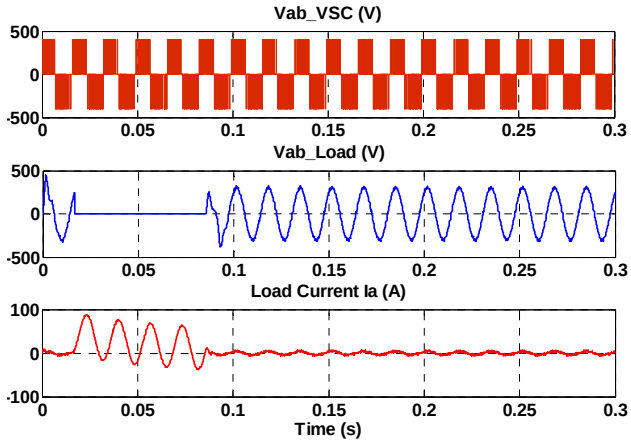

Figure 6: 3 phase short-circuit at the AC terminals of the inverter model 1, (a) voltage at the output of VSC, (b) voltage at the load, (c) Output current of the inverter.

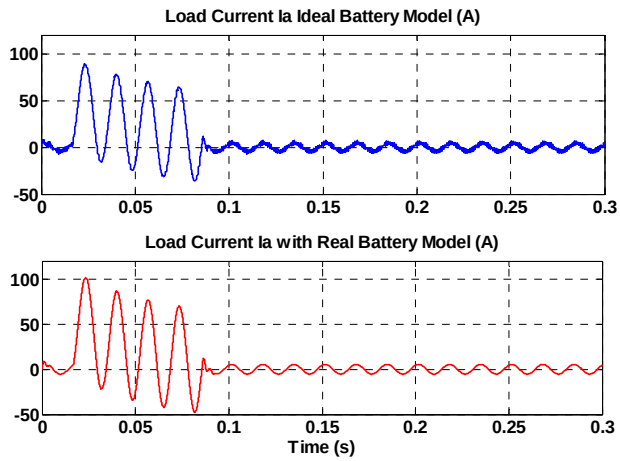

Figure 7: Comparison of output currents of the inverter with ideal and developed battery model: (a) ideal dc source, (b) real battery model.

Figure 8 shows the same scenario as Figure 7, but the SOC is lowered to 40% and internal resistance is raised 10 times to simulate the wear of the battery. The short-circuit current is reduced significantly.

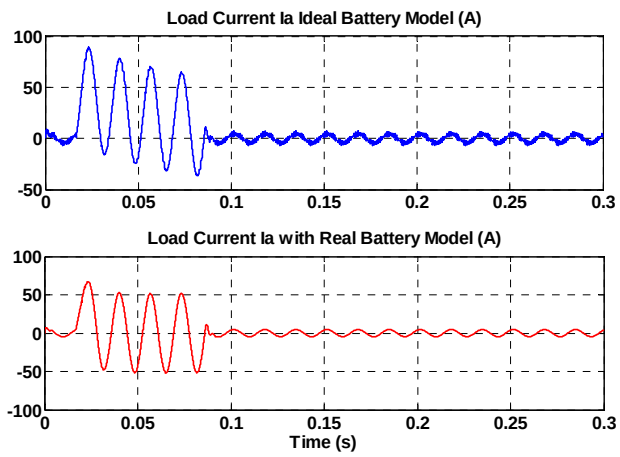

Figure 8: Output currents of inverter with ideal and real battery model: (a) ideal dc source, (b) real battery model.

Figure 9 shows the short-circuit currents after and before the isolating transformer at the AC output of the inverter. Short-circuit before the transformer leads to complete collapse of the inverter.

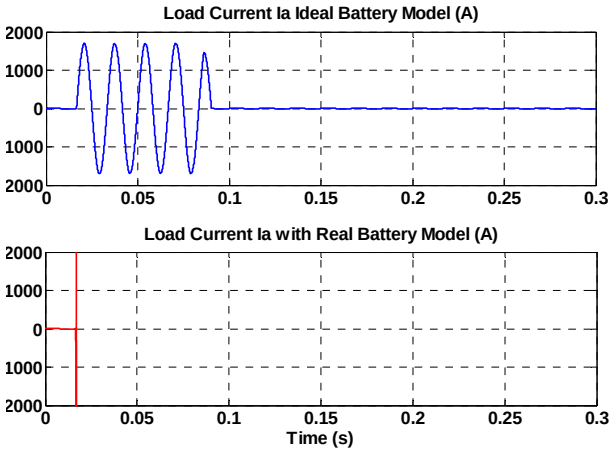

Figure 9: Comparison of short-circuit current (a) after the isolation transformer and (b) before it.

CONCLUSIONS

In this paper, it is shown that there is a requirement to investigate the contribution of EVs on the fault current, as the high penetration of EVs necessitates a change in historical view that inverter-based sources do not have significant effect on the fault level. Different modeling aspects of V2G are discussed and evaluated by simulation results. It is shown that the model of the battery along with the inverter are crucial in calculating the contribution of the fault current by EVs.

The simulation results show that the EVs could inject current during faults if there is a minimum impedance in the fault loop. It is worth noting that common software packages either have not dealt with the integration of EVs to the grid or uniquely concentrated on the dynamics and sophisticated mechanical and electrical models of an individaul EV, not a fleet of them in conjuction with the grid. More investigation along with the assistance of the EV manufactureres is required in this regard, especially to evaluate the risk of islanding the grid by EVs.

REFERENCES

[1] M. Khederzadeh, M. Khalili, 2014, “High Penetration of Electrical Vehicles in Microgrids: Threats and Opportunities,” International Journal of Emerging Electric Power Systems”, DE GRUYTER, vol. 15, Issue 5, pp. 471-484.

[2] C. Jin, X. Sheng, P. Ghosh, 2014, “Optimized Electric Vehicle Charging with Intermittent Renewable Energy Sources,” *IEEE Journal of Selected Topics in Signal Processing*, vol. 8, Issue 6, 1063-1072.

[3] J. Ostergaard, A. Foosn, S. Z. Xu, T. A. Mondorf, C. A. Andersen, S. Holthusen, T. Holm, M. F. Bendtsen, K. Behnke, 2009, “Electric Vehicles in Power Systems with 50% Wind Power Penetration: The Danish Case and the Edison Program,” *In European Conference Electricity & Mobility*.

[4] J. Wang, C. Liu, D. Ton, Y. Zhou, J. Kim, A. Vyas, 2011, “Impact of Plug-in Hybrid Electric Vehicles on Power Systems with Demand Response and Wind Power,” *Energy Policy*, vol. 39, pp. 4016-4021.

[5] S. Y. Derakhshandeh, A. S. Masoum, S. Deilami, M. A. S. Masoum, M. E. Hamedani Golshan, 2013, “Coordination of Generation Scheduling with PEVs Charging in Industrial Microgrids,” *IEEE Trans. on Power Systems*, 28, 3451-3461.

[6] N. Z. Xu, C. Y. Chung, 2014, “Well-Being Analysis of Generating Systems Considering Electric Vehicle Charging,” *IEEE Trans. on Power Systems*, vol. 29, Issue 5, 2311-2320.

[7] Z. Wang, S. Wang, 2013, “Grid Power Peak Shaving and Valley Filling Using Vehicle-to-Grid Systems,” *IEEE Trans. on Power Delivery*, 28, Issue 3, 1822-1829.

[8] L. Goransson, S. Karlsson, F. Johnsson, 2010, “Integration of Plug-in Hybrid Electric Vehicles in a Regional Wind-thermal Power System,” *Energy Policy*, 38, 5482-5492.

[9] S. Huang, D. Infield, 2009, “The Potential of Domestic Electric Vehicles to Contribute to Power System Operation Through Vehicle to Grid Technology,” *Proceedings of the 44th International Universities Power Engineering Conference (UPEC)*, Glasgow, Scotland.

[10] M. Singh, I. Kar, and P. Kumar, 2010, “Influence of EV on Grid Power Quality and Optimizing the Charging Schedule to Mitigate Voltage Imbalance and Reduce Power Loss,” *in Proc. 14th Int. Proc. Power Electron. Motion Control Conf. (EPE/PEMC)*, pp. T2-196–T2-203.

[11] A. M. Massoud, S. Ahmed, S. J. Finney, B. W. Williams, 2010, “Inverter-Based versus Synchronous-Based Distributed Generation; Fault Current Limitation and Protection Issues,” *IEEE Energy Conversion Congress and Exposition (ECCE)*, pp. 58-63.

[12] S. Phuttapatimok, A. Sangswang, M. Seapan, D. Chenvidhya, 2008, “Evaluation of fault contribution in the presence of PV grid-connected systems,” in Proc. *33rd IEEE Photovoltaic Specialists Conference, PVSC'08*, San Diego, CA, USA.

[13] N. Nimpitiwan, G. T. Heydt, R. Ayyanar, S. Suryanarayanan, 2007, “Fault Current Contribution From Synchronous Machine and Inverter Based Distributed Generators,” *IEEE Trans. On Power Delivery*, Vol. 22, No. 1, pp. 634-641.

[14] D. Turcotte, F. Katiraei, 2009, “Fault Contribution of Grid-Connected Inverters,” *IEEE Electrical Power Conference*, Montreal, Quebec, Canada.

[15] M. Singh, P. Kumar, I. Kar, 2012, “Implementation of Vehicle to Grid Infrastructure Using Fuzzy Logic Controller,” *IEEE Transactions On Smart Grid*, Vol. 3, No. 1, pp. 565-577.

I. D. C. Mendaza, B. Bak-Jensen, Z. Chen, 2013, “Alkaline Electrolyzer and V2G System DIgSILENT Models for Demand Response Analysis in Future Distribution Networks,” *IEEE PowerTech (POWERTECH), Grenoble*.

[16] O. Tremblay, L. A. Dessaint, 2009 "Experimental Validation of a Battery Dynamic Model for EV Applications." World Electric Vehicle Journal, Vol. 3, ISSN 2032-6653, AVERE, EVS24 Stavanger, Norway, May 13–16.