SWITCHING ON HARMONIC FILTER TRANSIENT ANALYSIS

Eng. Haythem Mostafa Mahmoud
South Cairo electricity distribution company- Egypt
Haythem-777@hotmail.com

Dr.Gamal Abdel Salam
South Cairo electricity distribution company (SCEDC) - Egypt
gamalalyyounis@yahoo.com

ABSTRACT

A detailed study of harmonics' problems had been made on one of the factories in an industrial zone in Egypt. It was revealed that a resonance case between plain capacitors and supply transformers feeding the load may occur, hence there will be a big risk of the capacitor damage and over voltage occurrence.

Accordingly, plain capacitors were replaced by automatic multistage detuned harmonic filter panels at 14% detuning (135 Hz)and 5.6% detuning (210 Hz).

Yet, as far as harmonic filter installation is considered , the steady state design approach was not solely adequate and should be accompanied by transient analysis study. So, for a proper filter design, the rating and duty values of its components must be chosen to withstand over current and over voltage at their peak. Measurements were carried out to monitor the transient over voltage and over current at the instant of switching on.

Five cases had been studied aiming at studying the impact of switching on upon the following harmonic filter and transient analysis : (5th , 7th)harmonic filter (3rd , 5th)harmonic filter and the 3rd ,the 5th and the 7th harmonic filter individually. The simulation had been done using matlab program model. It consist of three phase source feeding a 400 HP DC motors and 6- pulse drive fed through low voltage side of 500 KVA(11/0.5 Kv) three phase transformer.The 3rd ,the 5th and the 7th are the predominant charactaristic load harmonics. Simulation results showed that at the switching on instant, an over voltage at a range of 650 V to 580 V and lasts for 0.3 second had been brought in addition to a current total harmonic distortion that reached 28% to 115%.

In conclusion the over voltage and over current transients must be taken into consideration when choosing the required rated voltage and rated current of the installed capacitor banks and harmonic filters.

INTRODUCTION

Harmonics have become a major problem in the power system transmission and distribution grid, especially with the remarkable spread of nonlinear loads and electronic equipments.

Due to bad effects of harmonic distortion on sensitive electrical equipments and malfunction of the devices , tuned filters are required, such as, 5th , 7th and 11th filter banks.

These filters are designed with optimization and with specific current distortion limits in mind.

They are more costly than simple de-tuned filter banks, but are effective in reducing the system distortion.

The ***(IEEE standard 18-2002)*** is giving the recommended limits which must not be exceeded regarding overvoltage and overcurrent loading of harmonic filter. For large harmonic producing loads, the use of multi stage filter is sometimes the only reasonable economic solution in order to meet the required harmonic mitigation and to meet IEEE standards.

The designs of tuned filters are subjected to various design considerations. Because of harmonic filter very low impedance characteristic, the filter acts like a sink to load harmonics current. To prevent the over flow of the filter, some specific and strict design rules must be followed and to meet the (IEEE 18-2002) recommended limits which specify maximum permissible limits of voltages and currents in percentage of the rated values for filter components.

Tuned passive filters are susceptible to being overloaded due to harmonic loads and/or supply voltage distortions, thus, effective passive filter design requires extensive system studies and engineering effort.

One of the important aspects of multi stage filter design is the over voltage conditions which the filter is affected by during different loading conditions and in the presence of the harmonics and at the switching transients instants.

1- SYSTEM CONFIGURATION

The system consists of 300 KVA 11/0.5 KV transformer with transformer impedance 0.04 p.u supplying a load consists of a group of VSD (variable speed drive) for large motors of total rating 235 KVA .

- **Supply :**

- Supply voltage :[11 kv]
- Fault level :[500 Mva]
- X/R-ratio :[10]
- Transformer rating :[0.5 Mva]
- Transf. impedance [%] : 4
- Transf. X/R ratio :[10]
- system voltage : [0.5 kv]
- frequency :[50 Hz]

- **Load :**

- Induction motor loads : [375 KVA]
- Actual power factor : [0.80]

2- SIMULATION MODEL

Using MATLAB program model and network configuration that consists of three phase source feeding a 400 HP DC motors and 6- pulse drive feeding through 500 KVA three phase transformer.

Calculating the capacitor rating required to improve power factor to 0.97

P(KW) = KVA*P.F= 375*0.80= 300 KW

Qc (kVAR) = 300 *[Tan (Cos-1 0.80) –Tan (Cos-1 0.97)] = 150 KVAR @ 500V.

Installing a PFC capacitor bank of 150 (2 x 75) Kvar to improve PF to 0.97.

A three phase CB is used with a switching at instant second 2 The 6- pulse drive results in the 5th,7th harmonics. Tuned harmonic filter at 5th rated 75 Kvar & 7th tuning rated 75 Kvar is installed. Also a verification case installing a 3rd & 5th tuning and rated 70 KVAR is studied for purpose of comparison.

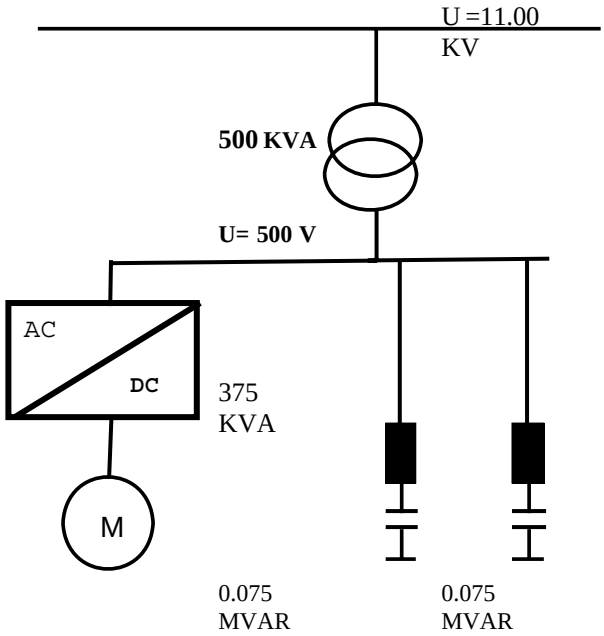

Figure (2) Network Configuration

The V-I measurement block is used to measure both load bus voltages and currents. Figure (1) illustrates system matlab model and Figure (2) network configuration.

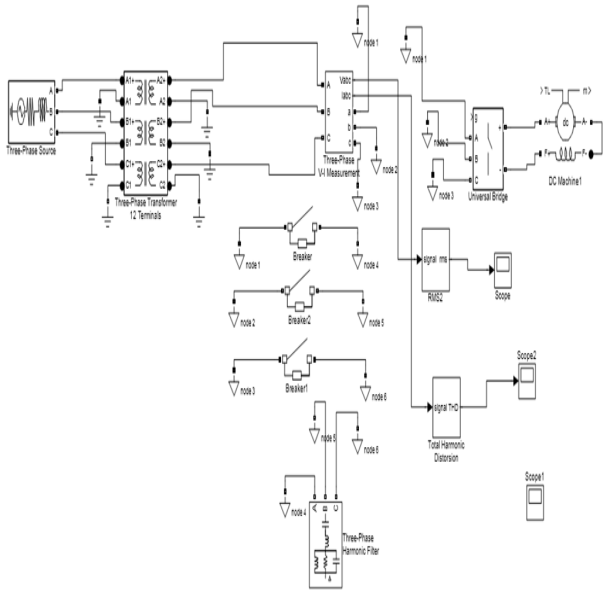

Figure (1) System Matlab Model

3- SIMULATION RESULTS

3.1- Case 1 (5th& 7th Harmonic Filter):

In figure (3) at switching instant second 2 the transient period lasts for 0.3 second and the peak voltage is 650 V and then decay gradually to reach its steady state at 530 V with a rise of 150 V resulting from connecting harmonic filter .

In figure (4) The ITHD = 125 % at switching instant and come back to its steady state value 3 %.

3.2- Case 2 (3rd& 5^{th}harmonic filter):

When double tuned harmonic filter at 3th & 5th is used the next results is shown in figure (5) and figure (6).

In figure (5) the peak voltage is 590 V result from connecting harmonic filter and the transient period lasts for 0.3 second.In figure (6) at switching instant The ITHD = 75%.

3.3- Case 3 (3^{rd}harmonic filter):

When single tuned 3rd harmonic filter is used the next results are shown in figure (7) and figure (8).In figure (7), the peak voltage is 580 V result from connecting harmonic filter and the transient period lasts for 0.2 second. In figure (8) The ITHD = 33% at switching instant.

3.4- Case 4 (5^{rd}harmonic filter):

When single tuned harmonic filter at 5th is used the next results are shown in figure (9), figure (10)

In figure (9) the peak voltage is 610 V result from connecting harmonic filter and the transient period lasts for

0.2 second. In figure (10) which indicates that The ITHD = 28% at switching instant.

3.5- Case 5 (7rd harmonic filter):

When single tuned harmonic filter at 7th is used, the peak voltage is 645 V resulted from connecting harmonic filter and the transient period lasts for 0.2 second. This shown In figure (11).

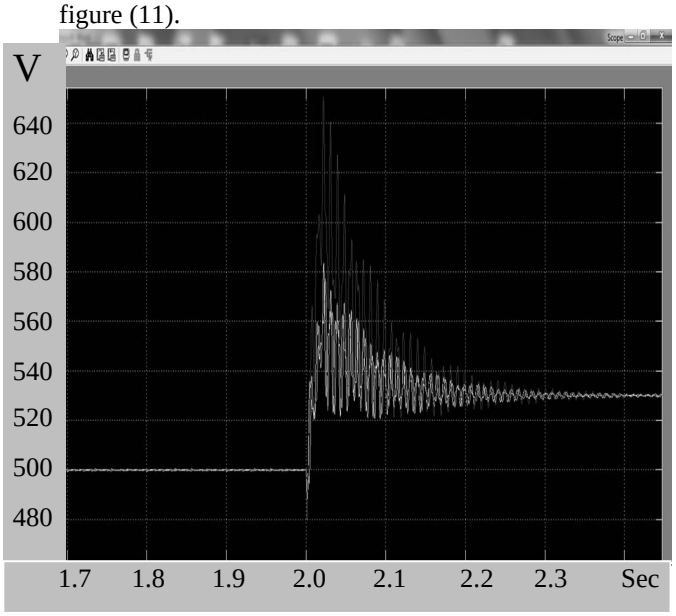

Figure (3) Voltage vr. time in sec
Transient peak voltage reaches 650V

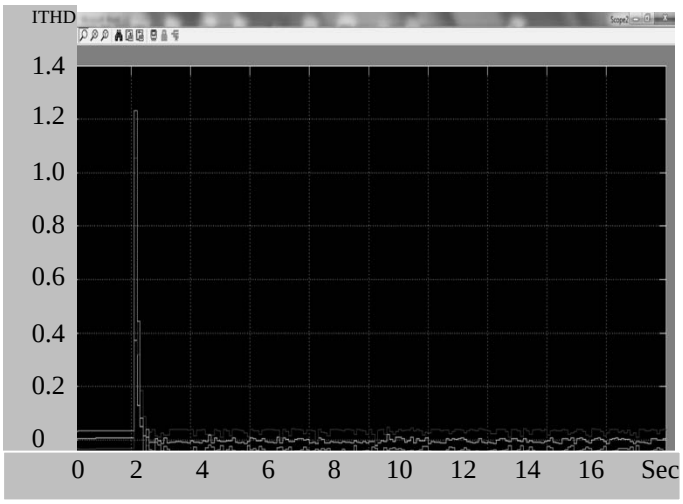

Figure (4) Harmonic current percentage vr. time in sec
ITHD = 125 % at switching instant

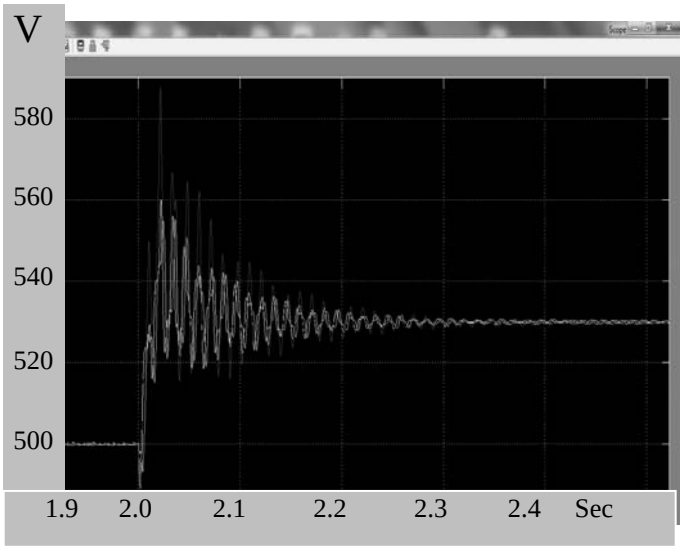

Figure (5) Voltage vr. time in sec
Transient peak voltage reaches 590V

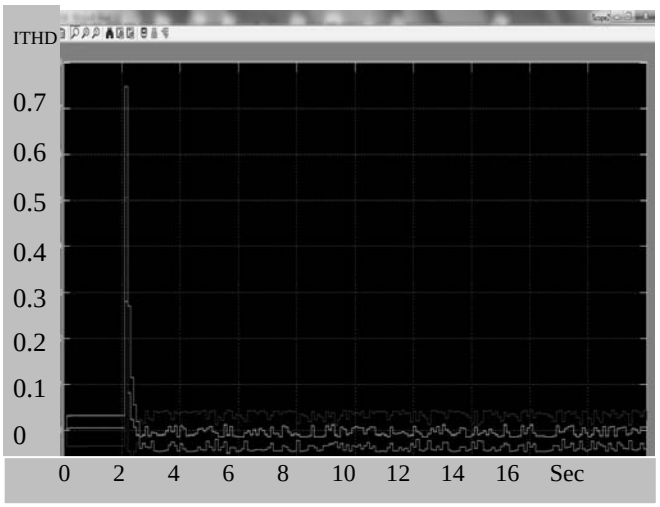

Figure (6) Harmonic current percentage vr. time in sec
ITHD = 75 % at switching instant

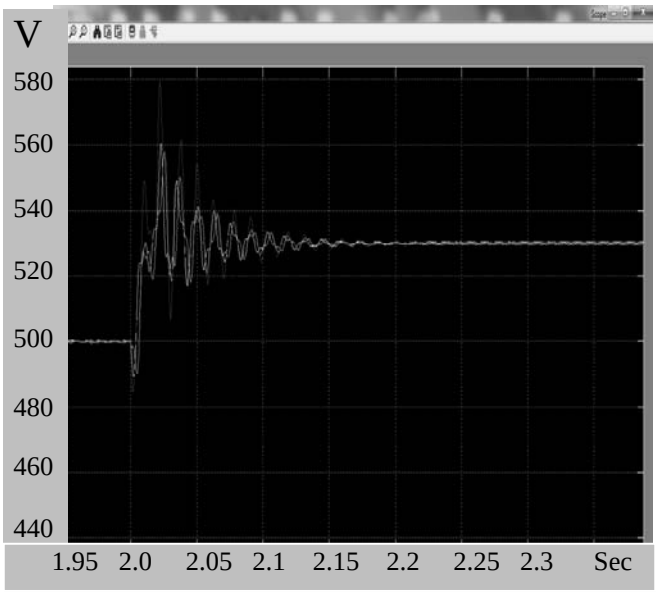

Figure (7) Voltage vr. time in sec
Transient peak voltage reaches 580V

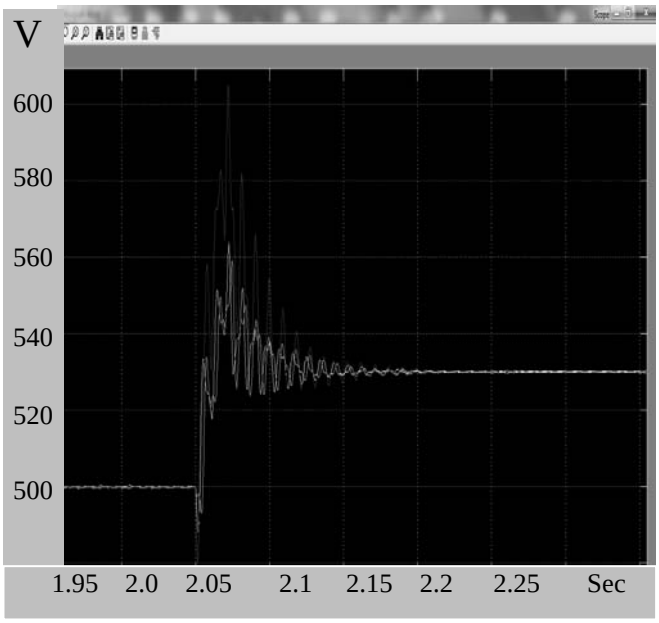

figure (9) Voltage vr. time in sec
Transient peak voltage reaches 610V

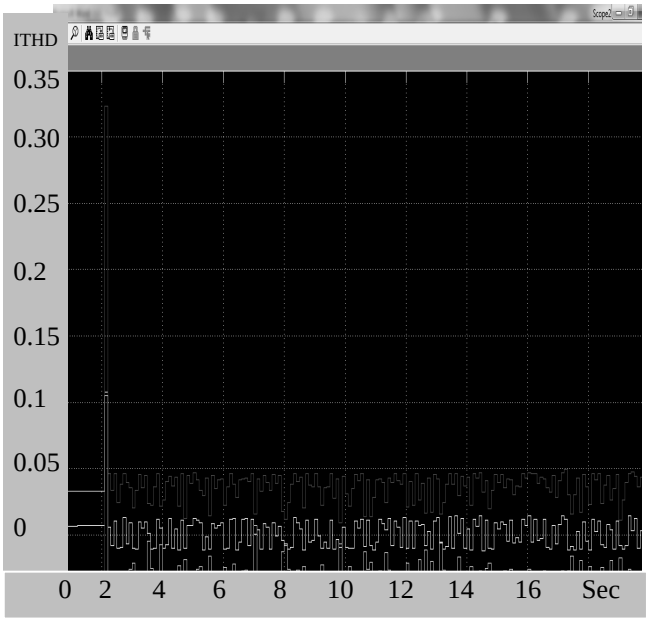

Figure (8) Harmonic current percentage vr. time in sec
ITHD = 33 % at switching instant

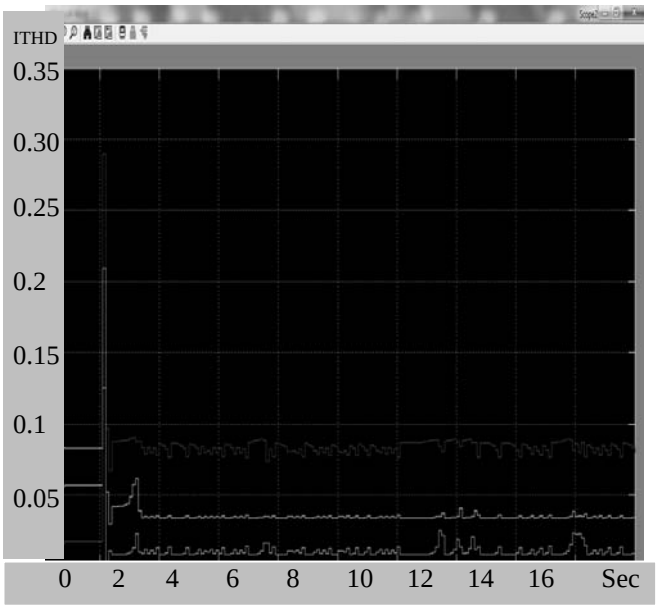

Figure (10) Harmonic current percentage vr. time in sec
ITHD = 28 % at switching instant

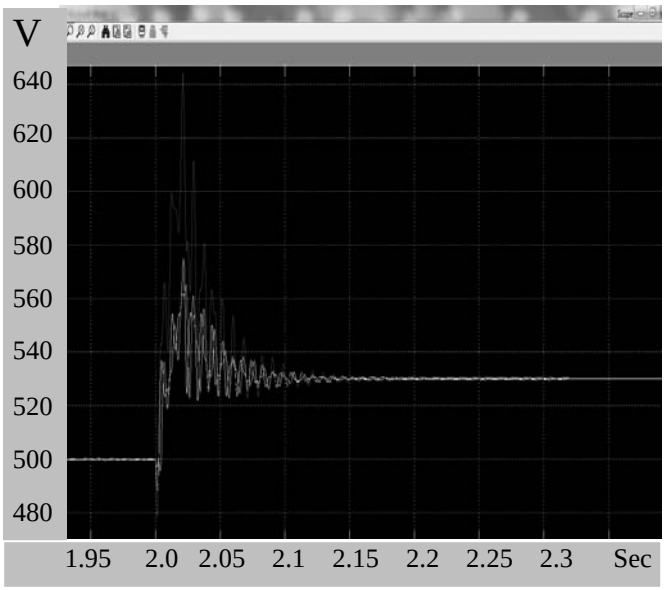

Figure (11) Voltage vr. time in sec
Transient peak voltage reaches 645V

6- THE SUMMARIZED RESULTS

The obtained results of previous case studies are summarized in Table (1)

Table (1) Simulation Results

	Peak voltage	Peak ITHD	steady state value of ITHD	steady state Voltage	Transient period (Second)
Case (1) 5th , 7th harmonic filters	650 V	ITHD = 115 %	3 %	530 V	0.3 sec
Case (2) 3rd , 5th harmonic filters	590 V	ITHD = 75%	3 %	530 V	0.3 sec
Case (3) 3rd harmonic filter	580 V	ITHD = 33%	3 %	530 V	0.2 sec
Case (4) 5th harmonic filter	610 V	ITHD = 24%	3 %	530 V	0.2 sec
Case (5) 7th harmonic filter	645 V	ITHD = 28%	3 %	530 V	0.2 sec

Results show the importance of transient analysis as well as the steady state study. we should take transient analysis into consideration when designing the harmonic filters, regarding the rating and duty values of its components specially the capacitor units and its chosen specifications to withstand the actual peak overvoltage stresses for short periods duty to achieve the proper filter design procedure.

6- CONCLUSION

Five cases were studied with (5th, 7th) harmonic filters , (3rd , 5th) harmonic filters, and individual 3rd filter , 5th filter , 7th filter , detailed results show over voltage caused at switching instant ranges from 650 V to 580 V and lasts for 0.3 seconds and the ITHD reaches 28 % to 115% .
The obtained results show the importance of transient analysis as well as the steady state study, when designing the harmonic filters.
In addition to the steady state study of overvoltage and over current, the transient analysis overvoltage conditions must be studied in order to avoid any amplification of VTHD, ITHD during switching process, destroying the main principle of filter instillation to maintain the supply always within the limits of IEEE standards, and the prevention of overloading of filter staged leading to filter capacitors failure, or damage.

REFERANCES

1- Power System Harmonic Analysis, Jos Arrillaga, Et al., John Wiley & Sons, 1997.
2- IEEE 519 Recommended Practices and Requirements for Harmonic Control in Electric Power Systems (2006)
3- Understanding Power System Harmonics Dept. of Electrical & Computer Engineering University of Texas at Austin , Prof. Mack Grady , 2006 .
4- Harmonics and Power Systems, Francisco C . De La rosa ,CRC Press 2006.1996.
5-IEEE 18-2002, IEEE Standard for Shunt Power Capacitors, Institute of Electrical and Electronics Engineers, Oct. 2002.
6- Design Guide, “Electric Power System Harmonics," R. C. Dugan, D. T. Rizy 2003,
7- Integral energy power quality center " Power factor correction and its pitfalls ,Vic Gosbell , Sarath Perera , May 1999.
8- R. Dugan, Electric Power Systems Quality, Mc Graw-Will, EUA, , pp. 167-224, 2003.