DG TRANSFER CONNECTION SCHEME IN ACTIVE DISTRIBUTION NETWORKS

Abdelrahman AKILA
SDEDCO – Egypt
Abdurrahman.akela@gmail.com

Ahmed HELAL
AASTMT – Egypt
ahmedanas@aast.edu

Hussien ELDESOUKI
AASTMT – Egypt
hdesouki@aast.edu

ABSTRACT

Fast Growth of load consumption in Egypt puts the electricity company in a real crisis. Energy rationalization programs have been adopted. New generation power plants are under construction. Period of a few years may be needed in order to fulfil all the load demands. Still distributed generation DG is considered a key solution for the problem. Standby units may be more than enough to cover the shortage in generation. Regulations for selling and buying electricity from consumers are being formed by the government. Standards for DG insertion in the network are difficult. One of the major difficulties is the impact on protection of distribution networks. In this paper, assessment of the problem will be made through a typical radial feeder with actually existing standby units. Transfer connection scheme will be illustrated, simulated and evaluated.

INTRODUCTION

South delta for electricity distribution SDEDC supplies electrical energy to the three provinces in the south of River Nile Delta. These provinces are Al-Gharbia, Al-Minoufia and Al-Qalubia. The total number of population in these provinces is about 12.5 million people. That represents about 15% of the total number of population in Egypt. The number of subscribers with SDEDC is more than 4 million subscribers. The peak load is 2145 MW. The total number of distribution transformers is 15452 transformers. The total length of OHTL is 7781.1 km, and 3524.2 km for underground cables.

Distribution networks in Egypt consist mostly of radial feeders. Hence, conventional protection systems are designed considering this topology. Protection apparatus must fulfil qualities as selectivity, stability, sensitivity, speed and reliability [1]. DG insertion in distribution networks severely affects the system radial form. Subsequently, the protection system will be negatively affected losing the previously stated qualities [2]. Various solutions have been presented by different researchers in the last decade.

In [3] a microprocessor-based recloser is used in order to implement the proposed scheme. The ratio between fuse current and recloser current is called fuse to recloser ratio (FRR). This ratio depends on the impedances of source, transformer, line, and DG. FRR is used to obtain a new curve setting which is called revised recloser curve. The recloser uses this revised curve to operate in case of a DG is connected to the feeder. After the recloser first opening, DG will be disconnected to prevent islanding. This requires that DG should have adequate protection device which will detect the loss of mains after the first recloser pickup. Then the recloser closes for the first time while DG no longer exists in the circuit and the original system status is restored. Therefore, the original coordination curve is valid again.

In [4] a scheme based on directional over current protection is proposed. The proposed scheme uses a microprocessor based recloser with two groups of protection. The direction of fault current distinguishes between the two groups. The first group is customized for faults downstream the recloser, while the second group is customized for faults upstream the recloser. Also for DGs to be connected downstream the recloser, it requires fuses of the laterals with DGs to be replaced with reclosers. Although the authors did not consider the recloser fast operation for clearing temporary faults (only fuse blowing scheme), they also did not consider that for faults on the main feeder downstream the recloser the current detected by the main feeder recloser and the laterals reclosers are different. The same for faults on the lateral with DG upstream the recloser the current detected by the lateral fuse and the main feeder recloser will also be different.

In [5] a scheme to disconnect DGs instantly from the system using Gate Turn-Off (GTO) thyristors is proposed. GTO is a semiconductor switch which is a device that can operate at high speed. Mechanical devices like circuit breaker have comparatively longer operating times. As soon as a fault occurs, the current sensing unit senses the fault and sends a blocking signal to the firing circuit. Thus within a few milliseconds GTOs stop conducting and DGs are taken out of the circuit in matter of moments. Before any fuse has a chance to operate, all DGs are out of circuit and system regains its purely radial nature. For a temporary fault, it is important to disconnect all the feeding sources in order to give a chance to the fault to die down by itself. After disconnection of DGs, recloser operates normally. After fault is cleared, reconnection attempt is made to reconnect all DGs back in the system. Disconnecting all DGs even for temporary faults which represent 80% of all faults taking place in distribution system is a loss of stability [6].

This paper presents and discusses a possible protection scheme that can be successfully implemented in active distribution networks with DG presence; In this scheme, a transfer connection protocol is activated during abnormal operation in order to transfer the DG insertion point to a healthy feeder and restore the faulty feeder radial nature allowing the protection to selectively isolate

the fault. Digital simulations are performed in the PSCAD/EMTDC® v4.2 software that will allow evaluating the effectiveness of the proposed scheme.

PROPOSED SCHEME AND ITS DESIGN CONSIDERATIONS

DG transfer connection is presented as a solution for the negative impacts on distribution protection systems caused by DG insertion. Instead of instant disconnecting of DG during fault conditions, the DG connection is transferred to a healthy point. This guarantees a full time operation of DG even during fault conditions. Auto-reclosing on two different unsynchronized sources will lead to hazardous impacts on distribution system equipment. Hence, a key feature of auto-recloser was abandoned as long as the DG exists in feeder. The transfer connection scheme solved auto-recloser problems in a reliable way even for temporary faults.

Transfer Connection Criteria

During the installation of a DG unit in a network, two insertion points should be inspected for the same unit. Each point should exist on a different feeder. These two feeders must be fed from the same transformer. The two feeders should be connected to each other at certain point. For example, substation switchgear for underground cables and MV distribution panels for overhead transmission lines.

Underground cables

Primary, backup and remote overcurrent protections form a complete coordination path for the protection of underground cables in a distribution network. By considering this criterion in choosing the other insertion point for DG we choose transfer point 2 as in figure 1.

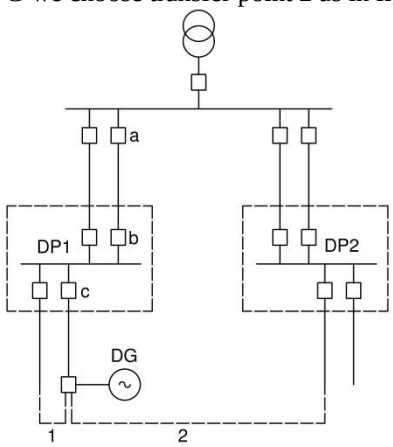

Figure 1: Network with DG transfer points.

This guarantees that at any fault condition DG will always be at more than double the distance of the substation to the fault point (lower contribution in fault current). The fault current will be the same for the entire coordination path a, b and c during fault condition. This will lead to a secure and selective action taken by one of the protective devices a, b and c existing in the coordination path. Transfer point 1 was not selected as the two feeders common point is in DP1. Transfer point 1 will cause a variation in fault currents seen by the successive protection relays b and c. This leads to a persisting miss coordination problem and a failure in transfer connection scheme.

Overhead transmission lines

Fuse, recloser and relay are the main protective devices for overhead TL. As long as the three devices exist in a single feeder, it may be enough for a transfer point to be on a feeder supplied from the same distribution panel. Transfer connection 1 & 2 in figure 2 will be possible effective transfer points for the DG location shown in figure 2.

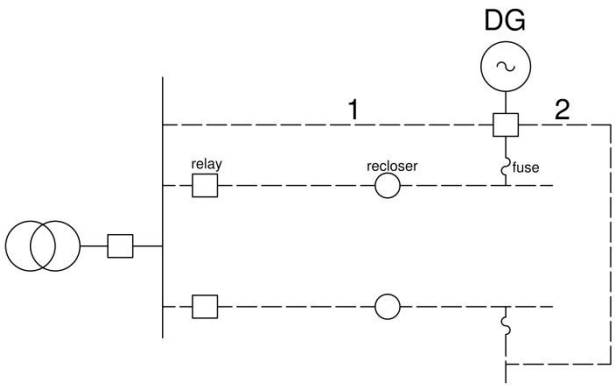

Figure 2: Two radial feeders with DG transfer points.

For the transfer connection scheme to be an effective solution for the miss-coordination problem caused by DG insertion in distribution networks, the following criteria should be preserved.

1. Two different adjacent insertion points should exist on a two different lines.
2. For both transfer points and while the DG exists on each of them, the other line should preserve a full coordination path.

Transfer Connection Procedure

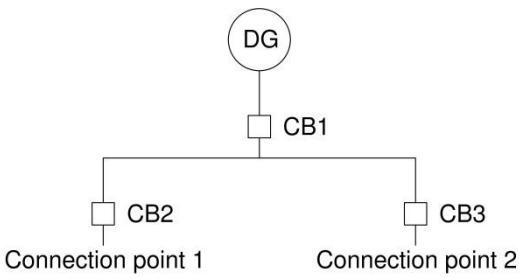

Figure 3: TC switchgear mechanism.

There will always be two insertion points for each DG unit. Figure 3 shows the SLD for the connection of two potential feeders and the DG unit. During normal operation CB1 & CB2 are closed while CB3 is opened keeping connection point 2 as a standby. A fault condition will occur in feeder 1. During this fault condition and before the protection of feeder 1 miss operate, CB3 will close and 20 ms later CB2 will open.

From the beginning of fault condition, CB1 will check the value of DG contribution in fault current, if this value is high enough (fault is near the DG unit); there will be a successful DG transfer connection from a faulty feeder 1 to a healthy feeder 2. Feeder 1 radial form is now restored and successful recloser operation is now possible. After the fault is removed, operators will be required to manually close CB2 and open CB3 even if the fault was a temporary fault. For a fault to occur in the DP busbar that supplies both feeders 1 & 2, it is required to disconnect the DG from both feeders [7]. CB2 has opened in about 70 ms. CB1 is still monitoring the fault condition even after the DG is transferred to the feeder 2. CB1 will open in a time restriction of being lower than the sum of minimum trip times of both feeders' protection devices. This will guarantee the DG isolation (if required) before the operation of any protection device in both feeders.

SIMULATION RESULTS

Feeder 1 is a 45-node radial feeder, 11-kV distribution feeder, which is an actual feeder in the El-Gharbia electricity sector, Tanta city, El-Gharbia, Egypt. The single-line diagram for this feeder is shown in Figure 4. In this figure, the nodes are numbered from 1 to 45. The total length of the feeder is almost 20 km. The total feeder load is 4168 VA. The maximum full load current measured at the relay is 210 A. The over current setting of the relay should be 1.25 times this current according to [8], which equals 263 A. Although the actual relay is set at 600 A. the total load downstream the recloser is 2190 VA. The maximum full load current measured at the recloser is 117 A. hence, the over current setting of the recloser should be 146 A. the actual setting of the recloser is 300 A. According to [8] the coordination time interval CTI between different successive devices shall be more than 200 ms and less than 500 ms.

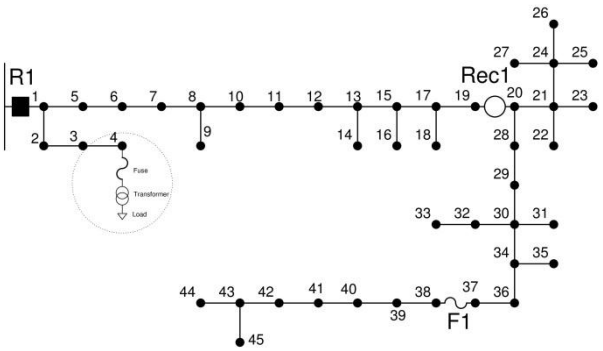

Figure 4: Typical radial feeder 1 with DG possible transfer connection point 1.

Feeder 2 is a 27-node radial feeder, 11-kV distribution feeder, which is an actual feeder in the El-Gharbia electricity sector, Tanta city, El-Gharbia, Egypt. The single-line diagram for this feeder is shown in Figure 5. In this figure, the nodes are numbered from 1 to 27. The total length of the feeder is almost 14 km. The total feeder load is 2934 VA. The maximum full load current measured at the relay is 145 A. The over current setting of the relay should be 1.25 times this current [8], which equals 182 A. But the actual relay is set at 400 A.

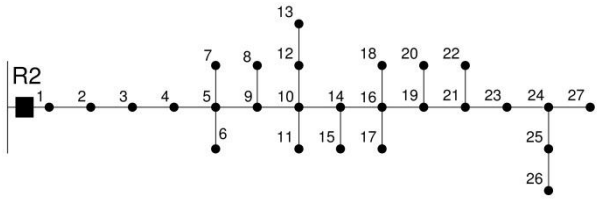

Figure 5: Typical radial feeder 2 with DG possible transfer connection point 2.

Blinded Protection

At node 39 in feeder 1 there is a large standby synchronous generator 1.5 MVA (36% of the total feeder load). If this DG unit was connected to the feeder, protection miss coordination cases will occur. In feeder 2 node 26 the closest point to the insertion point (node 39) in feeder 1. A 350 meters long link between the two points needs to be established by OHTL or cables. The cross section area of this link should withstand the DG full load current. At the DG location (node 39, feeder 1) TC switchgear is required to be installed. While at node 26 in feeder 2 (start of the link) a disconnecting switch will be adequate.

- Case1 will represent the condition of conventional protection system and conventional feeder without DG.
- Case2 will represent the condition of conventional protection system and modified feeder topology with DG.
- Case 3 will represent the condition of TC protection scheme and modified feeder topology with DG.
- All the faults in this simulation occur at time of 0.1s.

Before DG insertion for a 3 phase fault located at node 44 (feeder 1), selective fault isolation is done by fuse 1 and its trip time is shown in figure 6 (case1, fuse 1).

After DG insertion, for the same fault condition, a blinded protection occurred because of the DG contribution in fault current and due to the high impedance fault condition used [9]. Applying the TC scheme restored the protection system functionality. After CB3 closing and CB2 opening the DG is now connected to feeder 2 (healthy feeder), and all the fault current is fed through fuse1. The sensitivity of fuse 1 is restored.

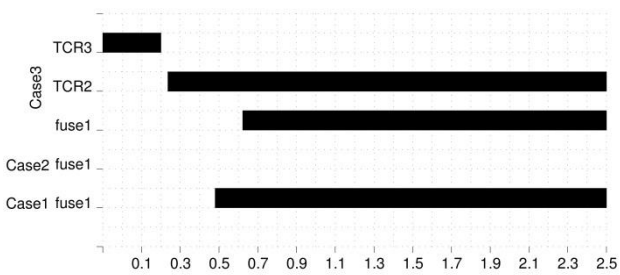

Figure 6: Trip times of certain protection devices showing blinded condition.

False tripping

If the DG is located at node 31 (feeder 1), it will be needed to search for the other closest insertion point on another feeder. In order to verify the effectiveness of the proposed scheme against false tripping, the same node 26 in feeder 2 will be chosen again although the link length required has increased. (Increasing the link length has a positive impact from the prospective of protection because when the DG is transferred, it will see increased impedance from source to fault point. But also it has a negative impact from the economic prospective.) For all the relays used in the TC switchgear, the overcurrent setting should be twice the DG rated current and relay 1 should has less than double the delay time of both relays 2 & 3. A 3Φ bolted fault located at node 41 caused the recloser fast operation as shown in (Case1, Rec1) in figure 7. After the recloser first making with adequate delay time of 0.12 s, fuse 1 has operated (Case1, fuse1).

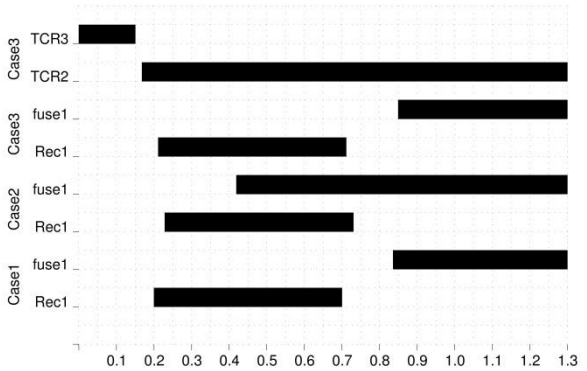

Figure 7: Trip times of certain protection devices showing false tripping condition.

For case 2, the DG caused different fault currents passing through successive protection devices (recloser sees grid contribution only; fuse1 sees the sum of grid and DG contribution) leading to a delayed recloser operation and a rushed fuse minimum melting MM time. In figure 7 after the recloser opening the DG continues in supplying the fault current through fuse 1 which leads to fuse blowing before the recloser first reclosing.

The proposed scheme restored the uniformity of fault current seen by the three protection devices (R1, rec1 and fuse1). But it caused a slight delay in the operation of both rec1 and fuse1. As shown in figure 7 case 3 the operation of CB2 & CB3 and the coordinated trip times of rec1 and fuse1.

Bi-Directionality

The same conditions of DG size and location in the blinded protection section will be used here. A 3 Φ bolted fault at the distribution panel busbar is used in this section. The authors in [7] decided that for this certain fault condition the DG should be disconnected and all the upstream protection devices shall not operate.

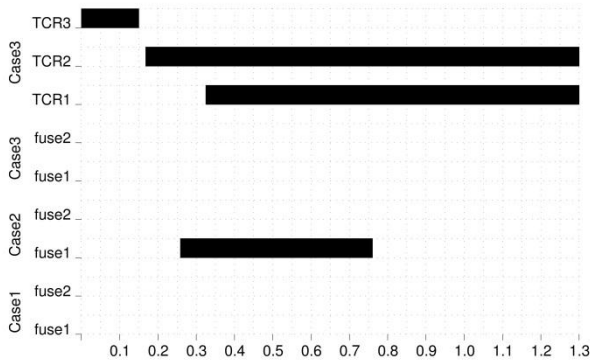

Figure 8: Trip times of certain protection devices showing bi-directionality condition.

For case 1 fuse 1 does not operate because there are only the transient currents fed to the fault from the dynamic loads downstream fuse1. The value and time of these transient currents does not cause fuse 1 to blow.

The DG contribution in fault current is high enough to cause fuse 1 to blow leading to unselective fault isolation. As shown in (case2, fuse1) in figure 8.

After the TC scheme is applied and even after the DG is transferred to the other standby feeder, the problem will still exist because both feeders are fed from the same DP. Relay1 in the TC switchgear continues to monitor the fault condition after the DG is transferred to feeder 2. When CB3 closed and CB2 opened, fuse 1 stopped to witness the fault condition and fuse 2 in feeder 2 started to countdown for its MM time. But CB1 opened before fuse 2 operation because it never stopped monitoring the fault current (not before the TC switch nor during the switch nor after the switch was done.) it was stated as a restriction before that the setting of relay1 in the TC switchgear should has a delayed time lower than the sum of fuse1 & fuse2 (smallest trip time in both feeders).

For a 3 Φ bolted fault at the DP but this time after R1 (starting of the feeder), it will be discussed because it will have almost the same fault currents as the previous fault condition.

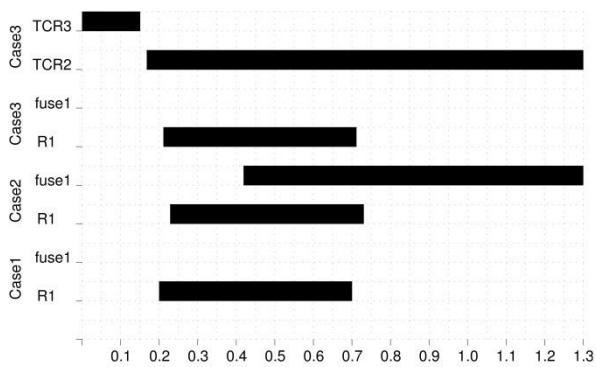

Figure 9: Trip times of certain protection devices showing false tripping condition 2.

Case 1, R1 operated due to high grid contribution in fault current 10564A.
In case 2, R1 operated at almost the same time but this time fuse1 also operated due to the DG contribution in fault current.
In case3, after the DG is transferred and still R1 did not operate, this means that fuse 2 in feeder 2 will witness the DG contribution in fault current. Why did not fuse 2 miss operate?
Due to the high distance from the fault location the DG contribution is relatively small. The less the measured fault current means longer operation times of fuses. In figure 9 fuse 1 took 0.31 sec to operate on the value of DG contribution in the corresponding fault at the beginning of the feeder. After the DG is transferred in 0.07 sec to feeder 2, fuse 2 now will blow after 0.38 from the instant of fault first occurred. But R1 operated after 0.12 sec which is adequate for selective fault isolation.

CONCLUSION

New possible protection scheme has been proposed in this paper. The proposed solution manipulates the feeder radial form for a strict time of 0.02 sec in order to transfer the DG from the faulty feeder to a near synchronized healthy one. Both insertion points should be chosen wisely and then the transfer connection switchgear is installed in order to achieve the procedures of the proposed scheme. The proposed scheme has been tested on various test cases and its effectiveness has been proved. A practical radial feeder from South Delta for Electricity Distribution SDEDC was digitally simulated with PSCAD/EMTDC® showing the suitability of the proposed scheme for the distribution networks in Egypt. For simulations a TC relay model has been developed.

REFERENCES

[1] L. G. Hewitson, M. Brown and R. Balakrishnan. 2005 *Practical Power Systems Protection*, Burlington, England, 1-4.

[2] A. Girgis, S. Brahma, 2001 "Effect of distributed generation on protective device coordination in distribution system," *Conference on Power Engineering, 2001. LESCOPE '01. 2001 Large Engineering Systems*, 115,119,

[3] S. Brahma, A. Girgis 2002 "Microprocessor - based reclosing to coordinate fuse and recloser in a system with high penetration of distributed generation." *In: IEEE Power Engineering Society Winter Meeting*, 453–458.

[4] A. Kamel, M. Alaam, A. Azmy, AY. Abdelaziz 2013. "Protection Coordination for Distribution Systems in Presence of Distributed Generators" *Journal of Electric Power Components and Systems*, vol. 41. 1555–1566.

[5] JK. Tailor, AH. Osman, 2008, "Restoration of fuse-recloser coordination in distribution system with high DG penetration". *In: Proc. IEEE Power Energy Soc. Gen. Meeting*, 1–8.

[6] JA. Sa'ed, S. Favuzza, M.G. Ippolito, F. Massaro, 2013, "An investigation of protection devices coordination effects on distributed generators capacity in radial distribution systems," *International Conference on Clean Electrical Power (ICCEP)*, 686-692.

[7] H. Beder, E. A. Badran and M. M. Ei-Saadawi. 2013, "Investigation of the impact of DG on the behaviour of NDEDC protection systems," *Proceedings CIRED conference, 22nd International Conference and Exhibition, Stockholm*, 1-4.

[8] IEEE Std. 242-2001. "*Recommended Practice for Protection and Coordination of Industrial and Commercial Power Systems*".

[9] F. Motabarian, M.A. Golkar, S. Hajiaghasi, 2013. "Surveying the effect of distributed generation (DG) on over current protection in radial distribution systems," *18th Conference on Electrical Power Distribution Networks (EPDC)*, 1-6.